DE5 8 Ω

SPECIFICATIONS

Driver mounted on B&C ME 45 horn + 1/2" adaptor

Throat Diameter	**13 mm (0.5 in)**
Nominal Impedance	**8 Ω**
Minimum Impedance	**6.7 Ω**
Nominal Power Handling 2 hour test made with continuous pink noise signal within the range from the recommended crossover frequency to 20 kHz. Power calculated on rated minimum impedance.	**10 W**
Continuous Power Handling Power on Continuous Program is defined as 3 dB greater than the Nominal rating.	**20 W**
Sensitivity Applied RMS Voltage is set to 2.83 V for 8 ohms Nominal Impedance.	**109 dB**
Frequency Range	**2 kHz - 18 kHz**
Recommended Crossover 12 dB/oct. or higher slope high-pass filter.	**2.5 kHz**
Voice Coil Diameter	**25 mm (1 in)**
Winding Material	**Aluminium**
Inductance	**0.1 mH**
Flux Density	**1.65 T**
Diaphragm Material	**Mylar**

MOUNTING AND SHIPPING INFO

Two M4 holes 180° on 53 mm (2.1 in) diameter

Overall Diameter	**62 mm (2.44 in)**
Depth	**34 mm (1.33 in)**
Net Weight	**0.17 kg (0.37 lb)**
Shipping Units	**1 pcs**
Shipping Weight	**0.18 kg (0.4 lb)**
Shipping Box	**65x55x40 mm (2.56x2.17x1.57 in)**

SERVICE KITS

HF replacement-diaphragm	**MMDDE58**

- 20 W continuous program power capacity
- 25 mm (1 in) aluminium voice coil
- 1/2" horn throat diameter
- Mylar diaphragm
- 1500 - 18000 Hz response
- 109 dB sensitivity

Available exclusively with 4.8+2.8 mm fast-on terminal tab



B&C Speakers S.p.A. Via Poggiomoro, 1 - Loc. Vallina, 50012 Bagno a Ripoli (FI) | ITALY
Tel. +39 055 65721 | Fax +39 055 6572312 | mail@bcspeakers.com

DE5 8 Ω

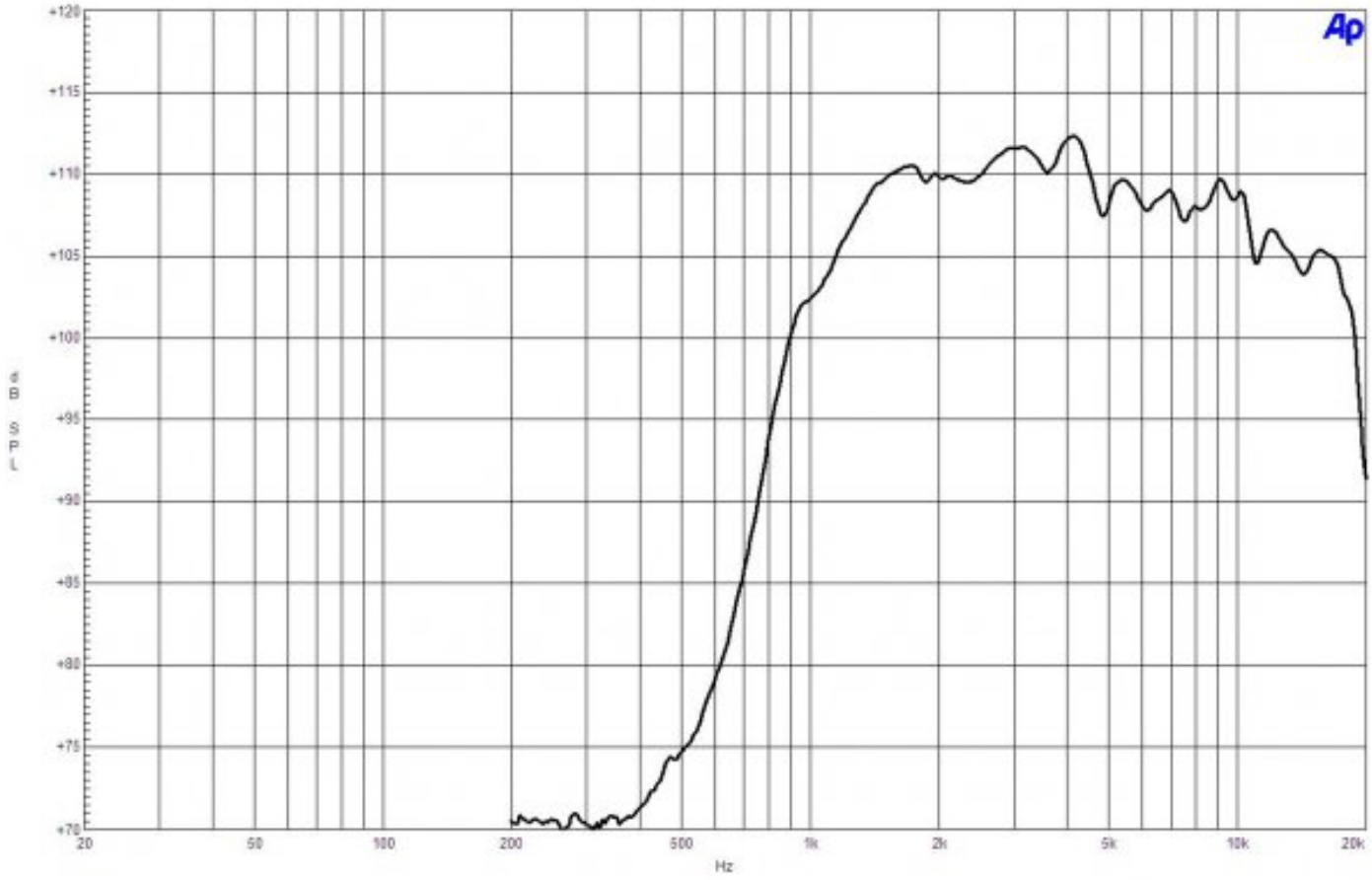
dB SPL
+120
+115
+110
+105
+100
+95
+90
+85
+80
+75
+70
20
50
100
200
500
1k
2k
5k
10k
20k
Hz

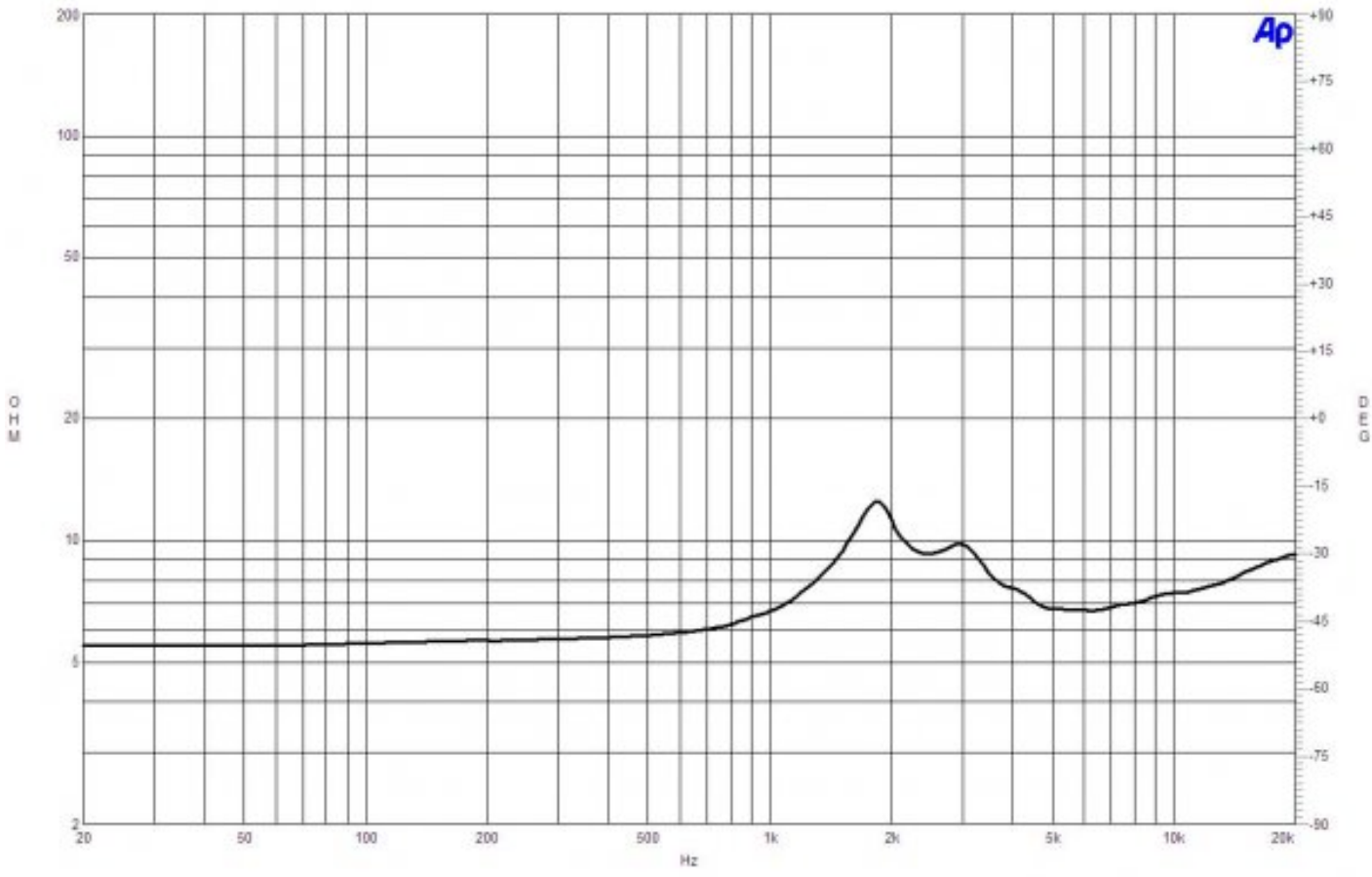
OHM
DEG
200
100
50
20
10
5
2
+90
+75
+60
+45
+30
+15
+0
-15
-30
-45
-60
-75
-90
20
50
100
200
500
1k
2k
5k
10k
20k
Hz

DE5 8 Ω

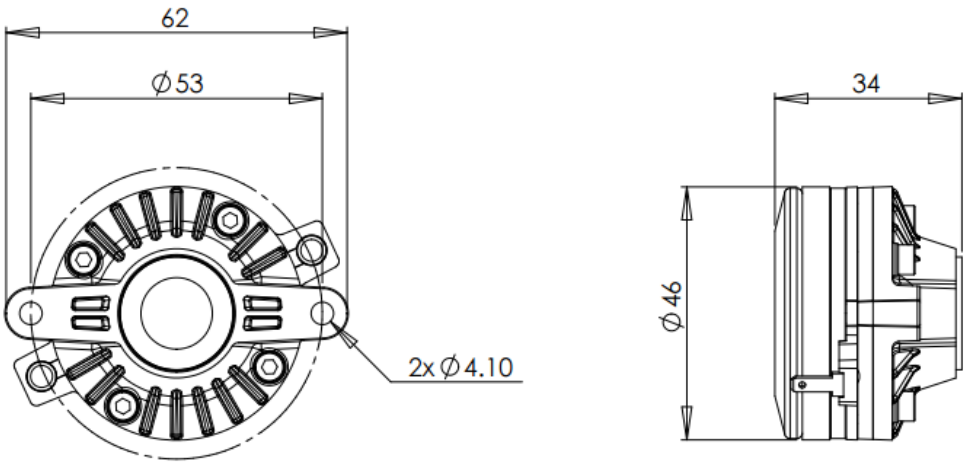

B&C Speakers S.p.A. Via Poggiomoro, 1 - Loc. Vallina, 50012 Bagno a Ripoli (FI) | ITALY
Tel. +39 055 65721 | Fax +39 055 6572312 | mail@bcspeakers.com