DE1090TN 8 Ω

SPECIFICATIONS

Driver mounted on B&C ME90 horn

Throat Diameter	**36 mm (1.4 in)**
Nominal Impedance	**8 Ω**
Minimum Impedance	**8.3 Ω**
Nominal Power Handling 2 hour test made with continuous pink noise signal within the range from the recommended crossover frequency to 20 kHz. Power calculated on rated minimum impedance.	**120 W**
Continuous Power Handling Power on Continuous Program is defined as 3 dB greater than the Nominal rating.	**240 W**
Sensitivity Applied RMS Voltage is set to 2.83 V for 8 ohms Nominal Impedance.	**108 dB**
Frequency Range	**0.5 kHz - 20 kHz**
Recommended Crossover 12 dB/oct. or higher slope high-pass filter.	**0.8 kHz**
Voice Coil Diameter	**100 mm (4 in)**
Winding Material	**Aluminium**
Inductance	**0.18 mH**
Flux Density	**1.9 T**
Diaphragm Material	**Titanium**

MOUNTING AND SHIPPING INFO

Four M6 holes 90° on 102 mm (4 in) diameter

Overall Diameter	**127 mm (5 in)**
Depth	**54 mm (2.13 in)**
Net Weight	**1.9 kg (4.19 lb)**
Shipping Units	**1 pcs**
Shipping Weight	**1.95 kg (4.29 lb)**
Shipping Box	**140x135x62 mm (5.51x5.31x2.44 in)**

SERVICE KITS

HF replacement-diaphragm	**MMD4CTN8M**



- 240 W continuous program power capacity
- 1.4" horn throat diameter
- 100 mm (4 in) aluminium voice coil
- Titanium diaphragm
- 500 - 20000 Hz response
- 108 dB sensitivity
- Neodymium magnet assembly with shorting copper cap

The DE1090TN is the latest version of our premium 100mm (4.0 in) voice coil, neodymium high frequency driver. The compact 127mm diameter was achieved using a specially designed inside ring neodymium magnet. The diaphragm used in DE1090TN has been completely redesigned to incorporate a bent edge voice coil former, as well as new dome and surround geometry. These modifications combine to better control diaphragm displacement and deformations, resulting in lower distortion and a smoother higher frequency response above 10kHz.

B&C Speakers S.p.A. Via Poggiomoro, 1 - Loc. Vallina, 50012 Bagno a Ripoli (FI) | ITALY
Tel. +39 055 65721 | Fax +39 055 6572312 | mail@bcspeakers.com

DE1090TN 8 Ω

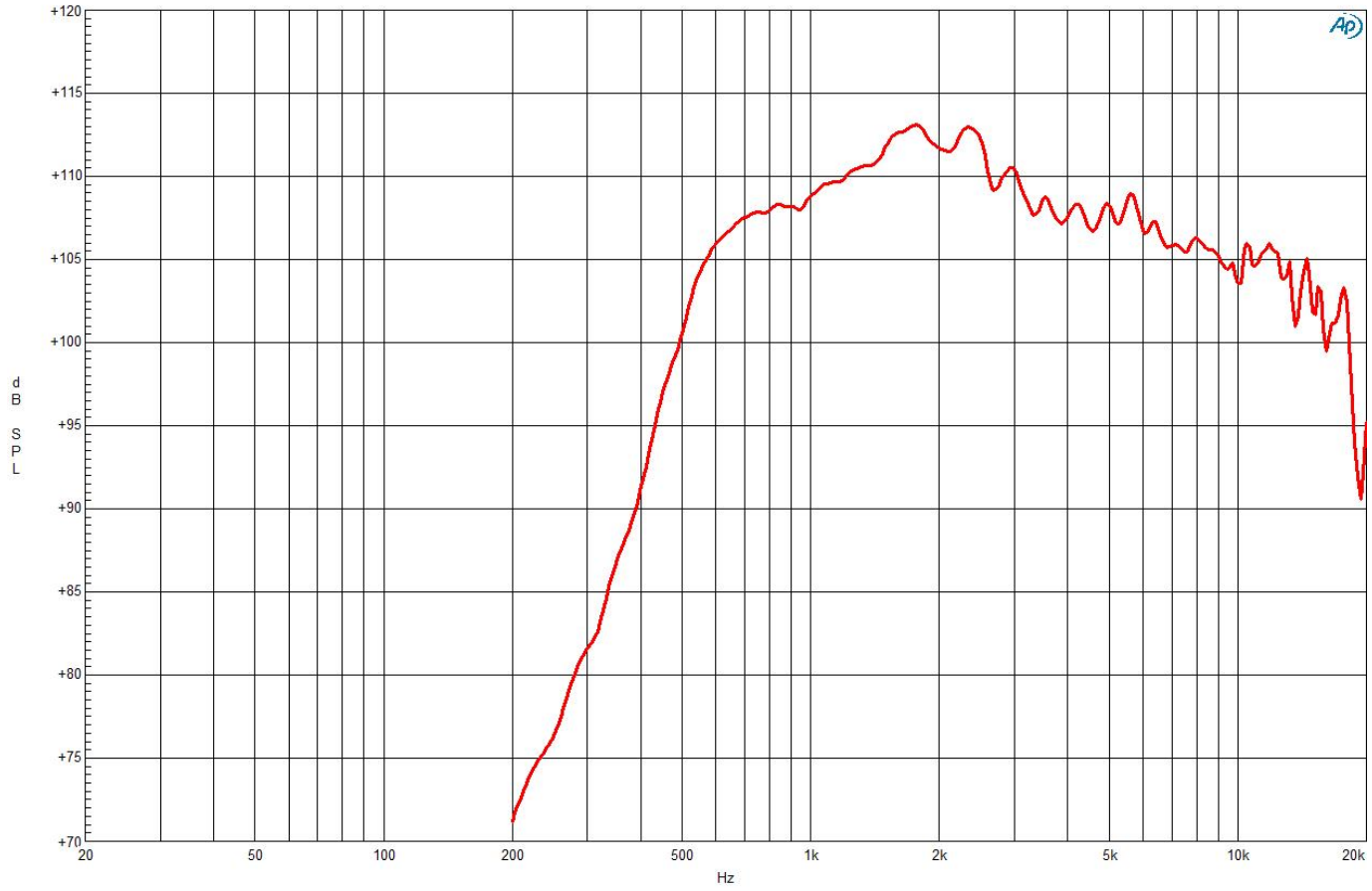

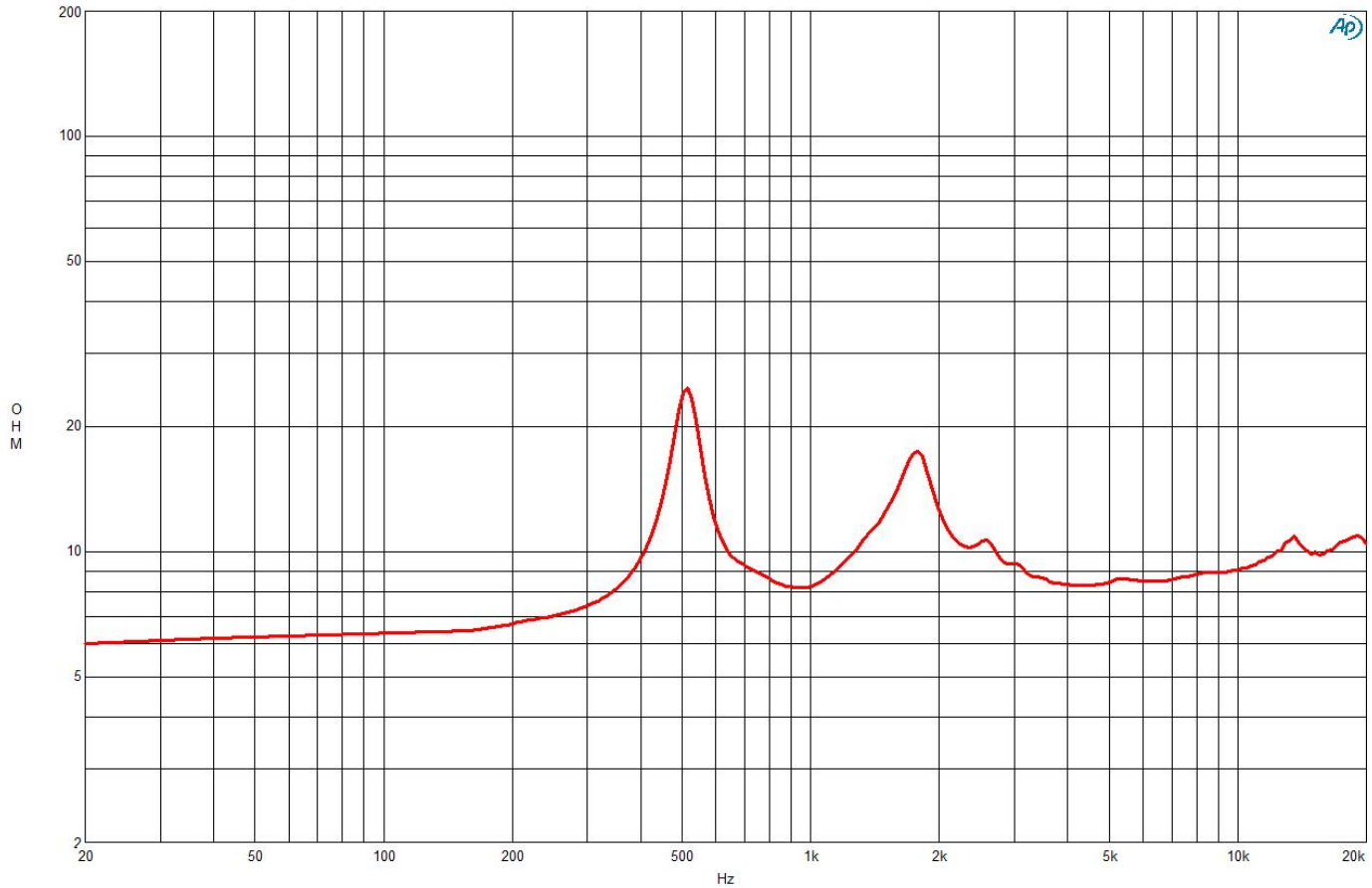

B&C Speakers S.p.A. Via Poggiomoro, 1 - Loc. Vallina, 50012 Bagno a Ripoli (FI) | ITALY
Tel. +39 055 65721 | Fax +39 055 6572312 | mail@bcspeakers.com

DE1090TN 8 Ω

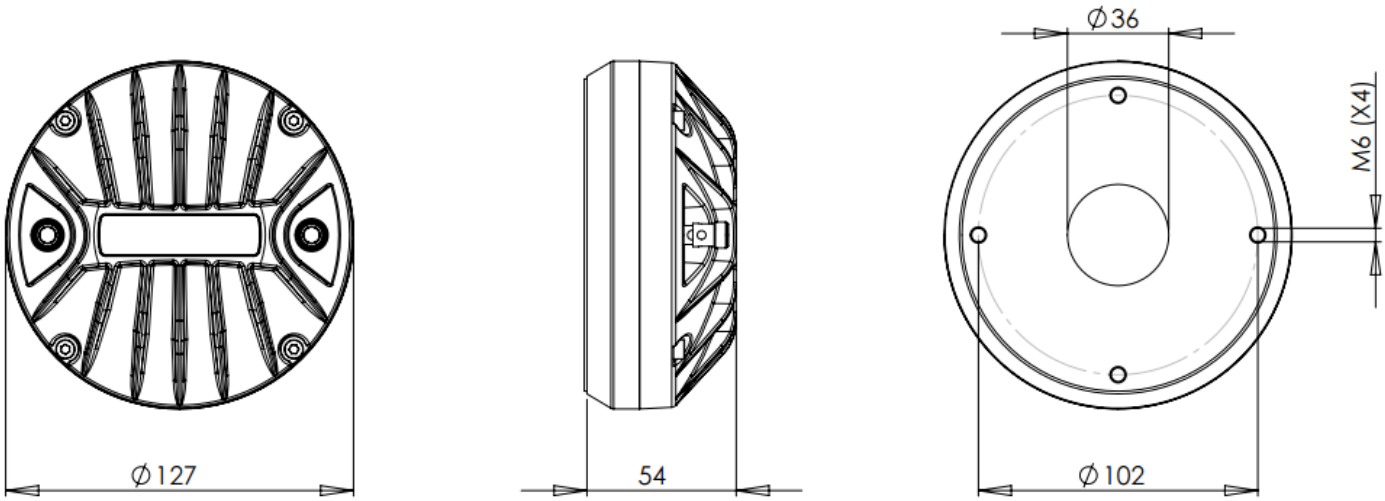

B&C Speakers S.p.A. Via Poggiomoro, 1 - Loc. Vallina, 50012 Bagno a Ripoli (FI) | ITALY
Tel. +39 055 65721 | Fax +39 055 6572312 | mail@bcspeakers.com