DE110 8 Ω

SPECIFICATIONS

Driver mounted on B&C ME 45 horn.

Throat Diameter	**25 mm (1 in)**
Nominal Impedance	**8 Ω**
Minimum Impedance	**8 Ω**
Nominal Power Handling 2 hour test made with continuous pink noise signal within the range from the recommended crossover frequency to 20 kHz. Power calculated on rated minimum impedance.	**25 W**
Continuous Power Handling Power on Continuous Program is defined as 3 dB greater than the Nominal rating.	**50 W**
Sensitivity Applied RMS Voltage is set to 2.83 V for 8 ohms Nominal Impedance.	**106 dB**
Frequency Range	**2 kHz - 18 kHz**
Recommended Crossover 12 dB/oct. or higher slope high-pass filter.	**2 kHz**
Voice Coil Diameter	**36 mm (1.4 in)**
Winding Material	**Aluminium**
Inductance	**0.14 mH**
Flux Density	**1.8 T**
Diaphragm Material	**HT Polymer**

MOUNTING AND SHIPPING INFO

Two M5 holes 180° on 52 mm (2.05 in) diameter

Overall Diameter	**60 mm (2.36 in)**
Depth	**35 mm (1.38 in)**
Net Weight	**0.32 kg (0.71 lb)**
Shipping Units	**1 pcs**
Shipping Weight	**0.35 kg (0.76 lb)**
Shipping Box	**105x105x65 mm (4.13x4.13x2.56 in)**

SERVICE KITS

HF replacement-diaphragm	**MMDDE1108**

- 50 W continuous program power capacity
- Ultra Compact 60mm diameter
- 1" horn throat diameter
- 36 mm (1.4 in) aluminium voice coil
- HT Polymer diaphragm
- 2000 - 18000 Hz response
- 106 dB sensitivity



B&C Speakers S.p.A. Via Poggiomoro, 1 - Loc. Vallina, 50012 Bagno a Ripoli (FI) | ITALY
Tel. +39 055 65721 | Fax +39 055 6572312 | mail@bcspeakers.com

DE110 8 Ω

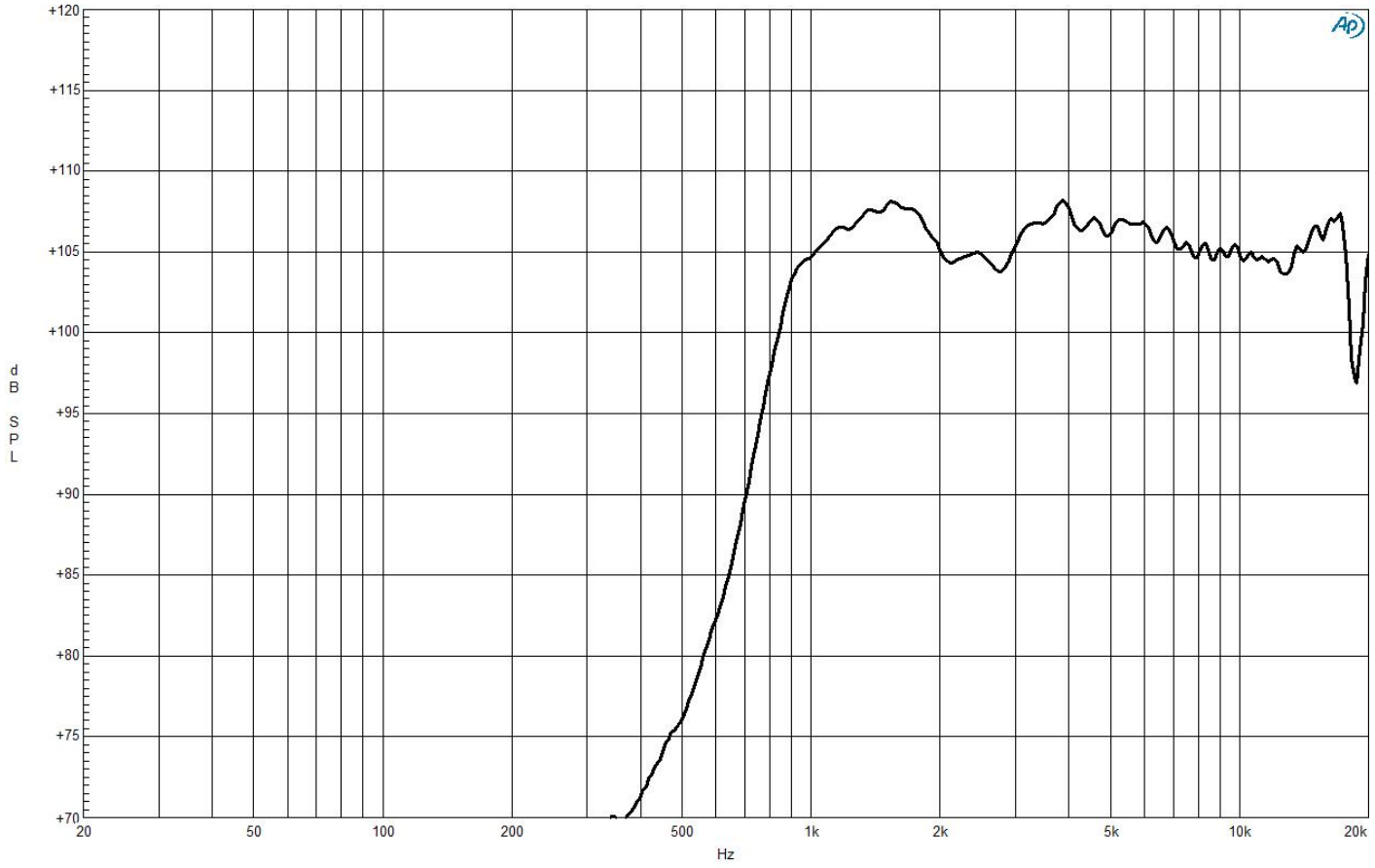

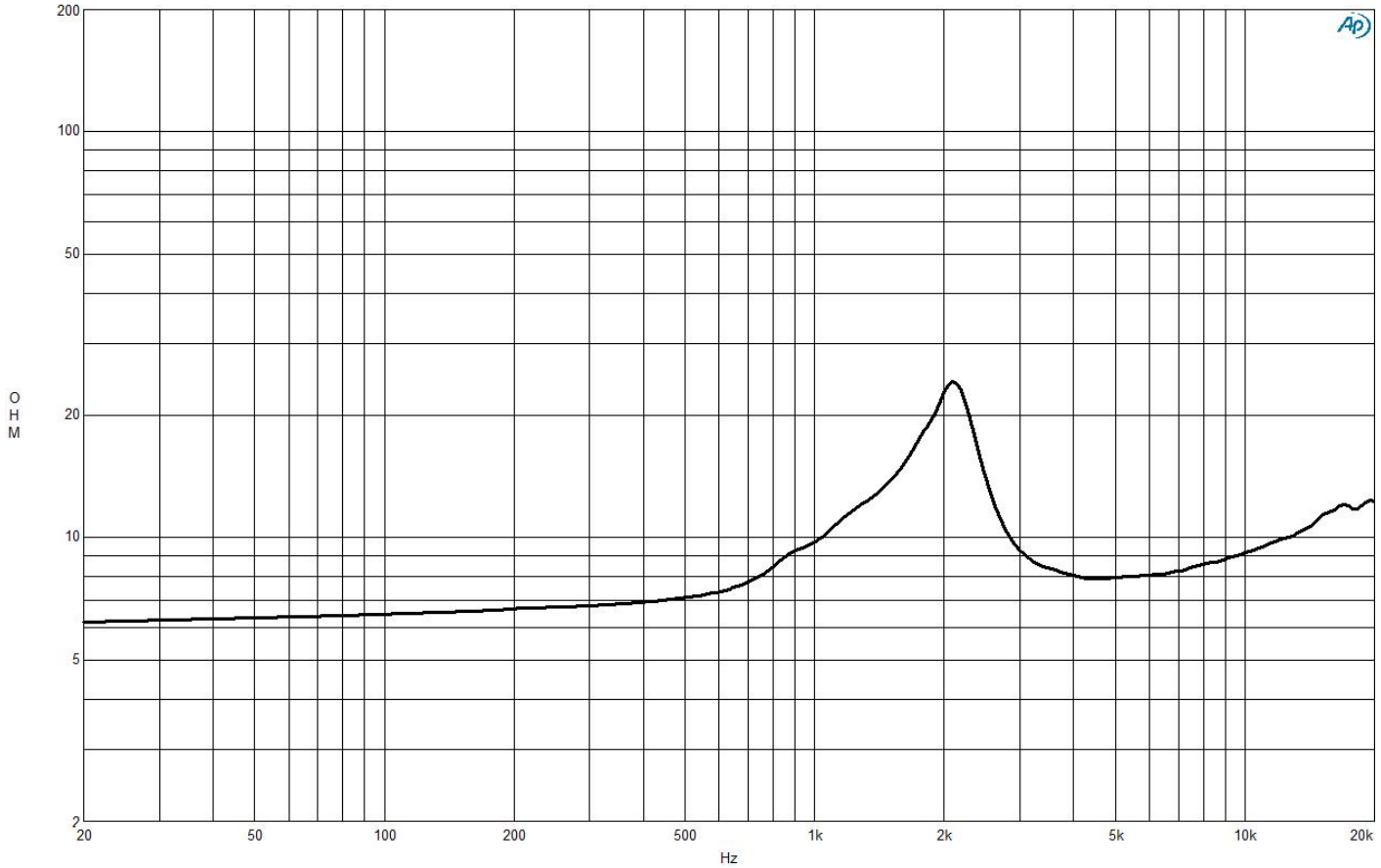

B&C Speakers S.p.A. Via Poggiomoro, 1 - Loc. Vallina, 50012 Bagno a Ripoli (FI) | ITALY
Tel. +39 055 65721 | Fax +39 055 6572312 | mail@bcspeakers.com

DE110 8 Ω

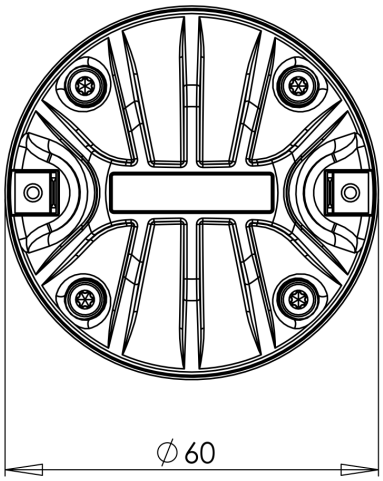

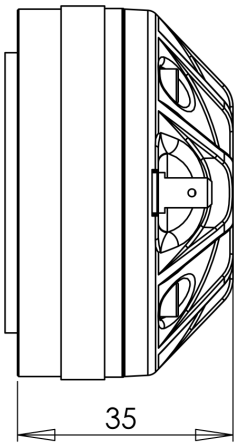

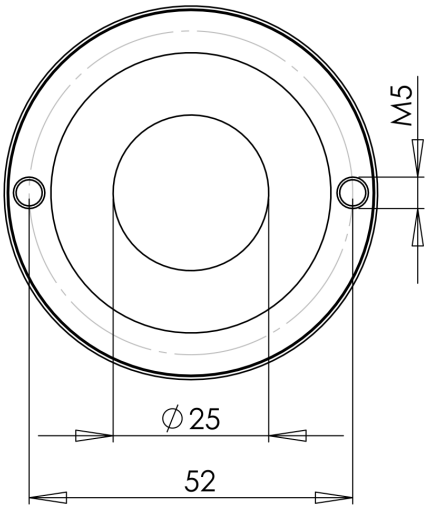

B&C Speakers S.p.A. Via Poggiomoro, 1 - Loc. Vallina, 50012 Bagno a Ripoli (FI) | ITALY
Tel. +39 055 65721 | Fax +39 055 6572312 | mail@bcspeakers.com