DE550 8 Ω

SPECIFICATIONS

Driver mounted on B&C ME 45 horn.

Throat Diameter	**25 mm (1 in)**
Nominal Impedance	**8 Ω**
Minimum Impedance	**8.3 Ω**
Nominal Power Handling 2 hour test made with continuous pink noise signal within the range from the recommended crossover frequency to 20 kHz. Power calculated on rated minimum impedance.	**70 W**
Continuous Power Handling Power on Continuous Program is defined as 3 dB greater than the Nominal rating.	**140 W**
Sensitivity Applied RMS Voltage is set to 2.83 V for 8 ohms Nominal Impedance.	**108 dB**
Frequency Range	**1 kHz - 17 kHz**
Recommended Crossover 12 dB/oct. or higher slope high-pass filter.	**1.2 kHz**
Voice Coil Diameter	**51 mm (2 in)**
Winding Material	**Aluminium**
Inductance	**0.14 mH**
Flux Density	**2 T**
Diaphragm Material	**HT Polymer**

MOUNTING AND SHIPPING INFO

Two M6 holes 180° on 76 mm (3 in) diameter

Overall Diameter	**92 mm (3.62 in)**
Depth	**49 mm (1.93 in)**
Net Weight	**1.17 kg (2.58 lb)**
Shipping Units	**1 pcs**
Shipping Weight	**1.2 kg (2.65 lb)**
Shipping Box	**105x105x65 mm (4.13x4.13x2.56 in)**

SERVICE KITS

HF replacement-diaphragm	**MMD5508**

140 W continuous program power capacity
1" horn throat diameter
51 mm (2 in) aluminium voice coil
HT Polymer diaphragm
1000 - 17000 Hz response
108 dB sensitivity



B&C Speakers S.p.A. Via Poggiomoro, 1 - Loc. Vallina, 50012 Bagno a Ripoli (FI) | ITALY
Tel. +39 055 65721 | Fax +39 055 6572312 | mail@bcspeakers.com

DE550 8 Ω

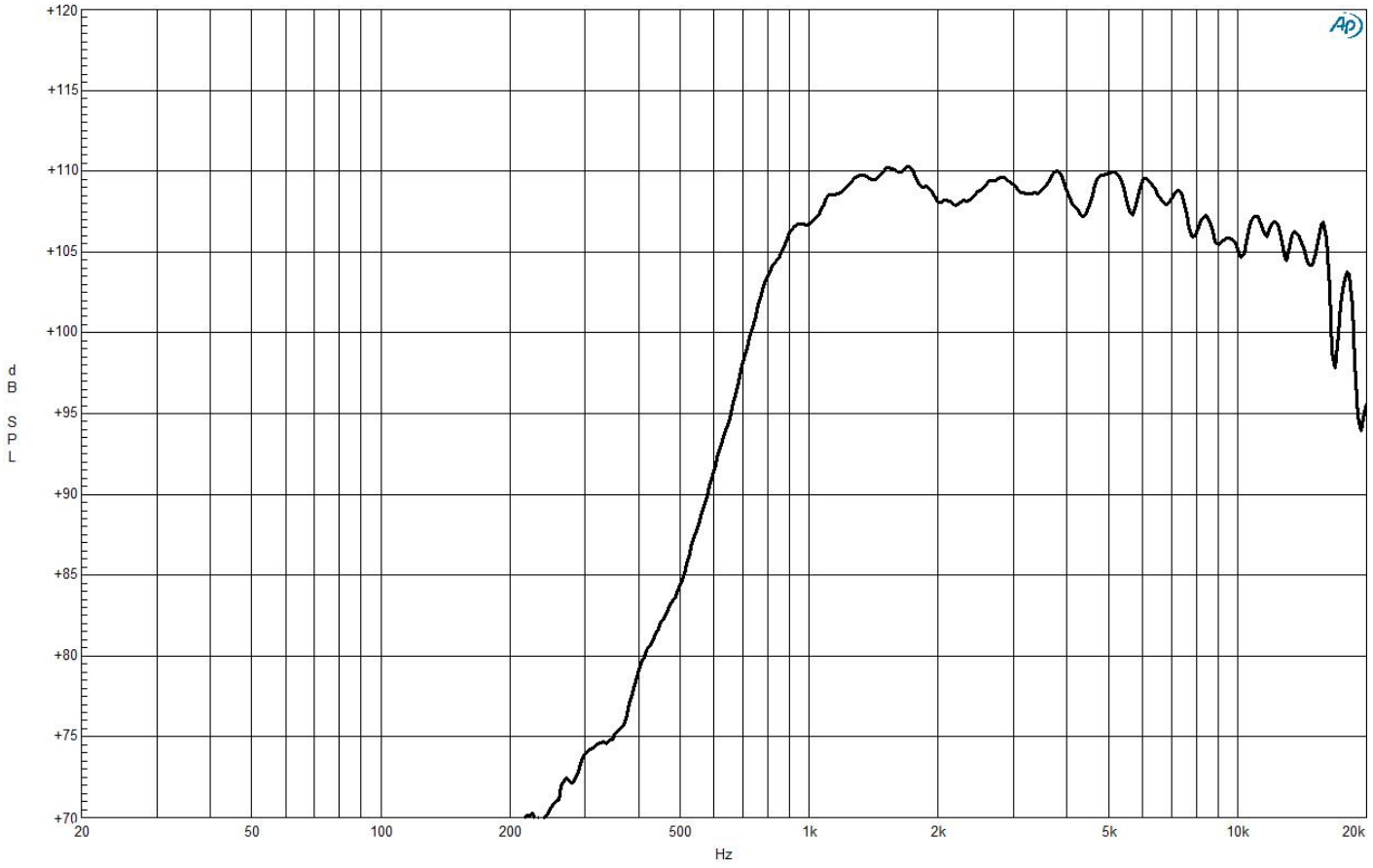

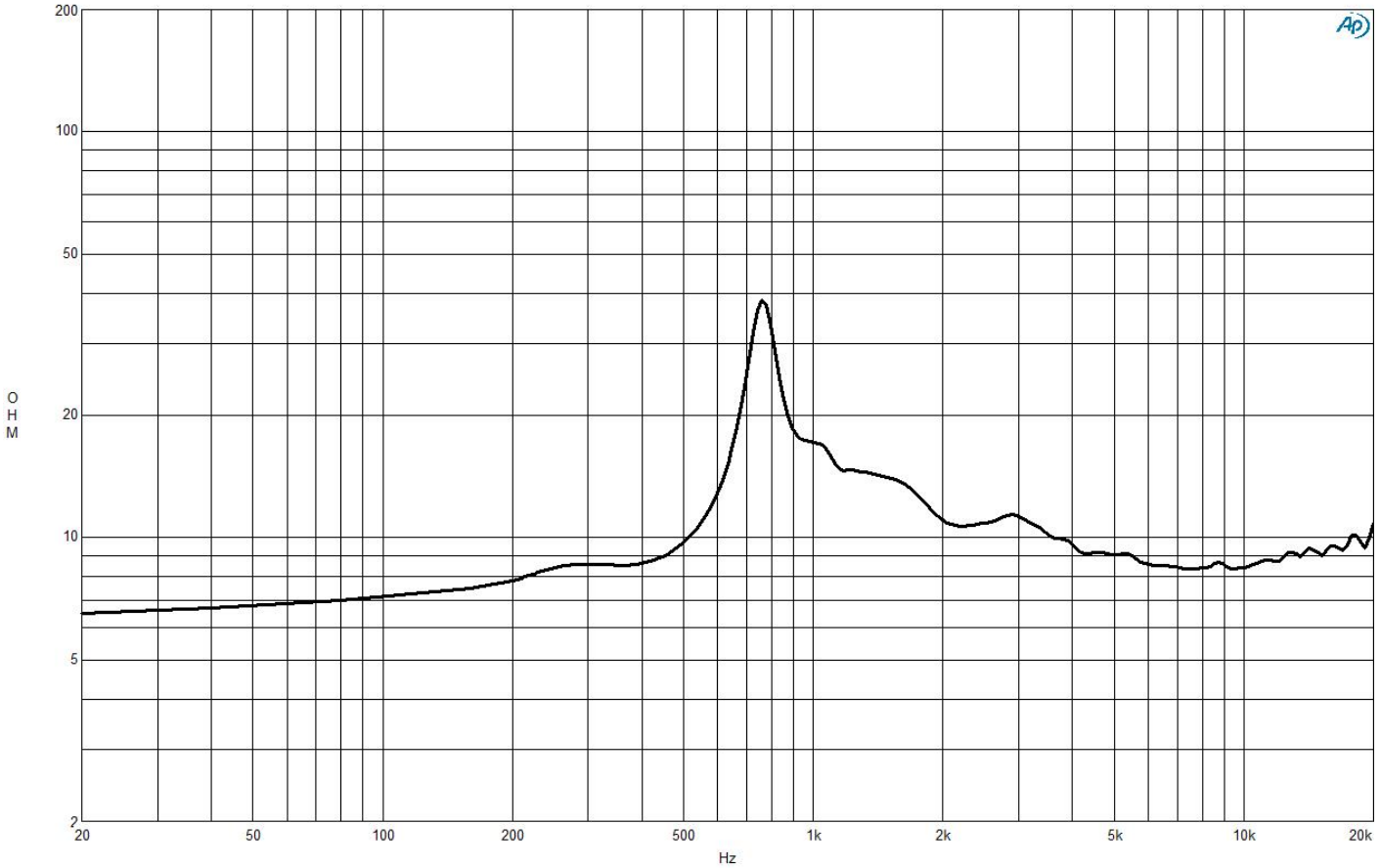

B&C Speakers S.p.A. Via Poggiomoro, 1 - Loc. Vallina, 50012 Bagno a Ripoli (FI) | ITALY
Tel. +39 055 65721 | Fax +39 055 6572312 | mail@bcspeakers.com

DE550 8 Ω

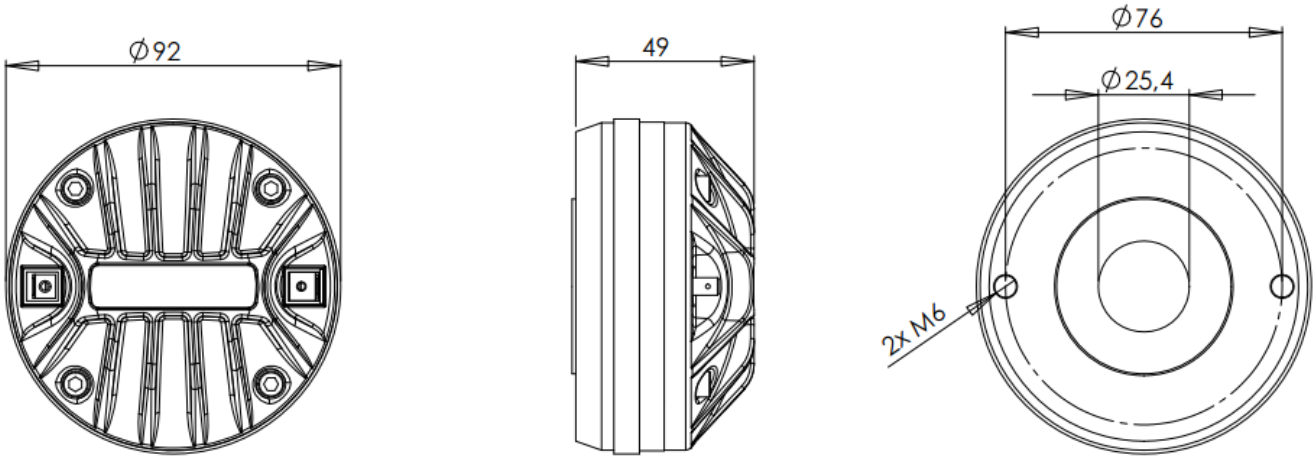

B&C Speakers S.p.A. Via Poggiomoro, 1 - Loc. Vallina, 50012 Bagno a Ripoli (FI) | ITALY
Tel. +39 055 65721 | Fax +39 055 6572312 | mail@bcspeakers.com