10CL64 8 Ω

Woofer

- 500 W continuous program power capacity
- 64 mm (2.5 in) copper voice coil
- 65 - 4000 Hz response
- 96 dB sensitivity





B&C Speakers S.p.A. Via Poggiomoro, 1 - Loc. Vallina, 50012 Bagno a Ripoli (FI) | ITALY
Tel. +39 055 65721 | Fax +39 055 6572312 | mail@bcspeakers.com

10CL64 8 Ω

Woofer

SPECIFICATIONS

Nominal Diameter	**250 mm (10 in)**
Nominal Impedance	**8 Ω**
Minimum Impedance	**6.3 Ω**
Nominal Power Handling 2 hours test made with continuous pink noise signal within the range Fs-10Fs. Power calculated on rated minumum impedance. Loudspeaker in free air.	**250 W**
Continuous Power Handling Power on Continuous Program is defined as 3 dB greater than the Nominal rating.	**500 W**
Sensitivity Applied RMS Voltage is set to 2.83 V for 8 ohms Nominal Impedance.	**96 dB**
Frequency Range	**65 Hz - 4000 Hz**
Voice Coil Diameter	**64 mm (2.5 in)**
Winding Material	**Copper**
Former Material	**Glass Fibre**
Winding Depth	**14.3 mm (0.56 in)**
Magnetic Gap Depth	**8 mm (0.31 in)**
Flux Density	**1.16 T**
Woofer Cone Treatment	**WP Waterproof Front Side**

PARAMETERS

Thiele-Small parameters are measured after a high level 20 Hz sine wave preconditioning test.

Fs	**63 Hz**
Re	**5.3 Ω**
Qes	**0.33**
Qms	**5.1**
Qts	**0.31**
Vas	**22.2 dm^3 (0.78 ft^3)**
Sd	**320 cm^2 (49.6 in^2)**
η0	**1.69 %**
Xmax	**5.2 mm**
Xvar	**6 mm**
Mms	**41.6 g**
Bl	**16.3 Tm**
Le	**1.17 mH**
EBP	**191 Hz**

DESIGN

Surround Shape	**Double Roll**
Cone Shape	**Exponential**
Magnet Material	**Neodymium Inside Slug**
Spider	**Single**
Pole Design	**T-Pole**
Woofer Cone Treatment	**WP Waterproof Front Side**
Recommended Enclosure	**29 dm^3 (1.02 ft^3)**
Recommended Tuning	**65 Hz**

MOUNTING AND SHIPPING INFO

Overall Diameter	**258 mm (10.16 in)**
Bolt Circle Diameter	**245 mm (9.65 in)**
Baffle Cutout Diameter	**232 mm (9.13 in)**
Depth	**112 mm (4.41 in)**
Flange and Gasket Thickness	**10 mm (0.39 in)**
Air Volume Occupied by Driver	**1 dm^3 (0.04 ft^3)**
Net Weight	**2 kg (4.41 lb)**
Shipping Units	**1 pcs**
Shipping Weight	**2.6 kg (5.73 lb)**
Shipping Box	**295x314x175 mm (11.61x12.36x6.89 in)**

SERVICE KITS

LF recone-kits	**RCK10CL648**

B&C Speakers S.p.A. Via Poggiomoro, 1 - Loc. Vallina, 50012 Bagno a Ripoli (FI) | ITALY
Tel. +39 055 65721 | Fax +39 055 6572312 | mail@bcspeakers.com

10CL64 8 Ω

Woofer

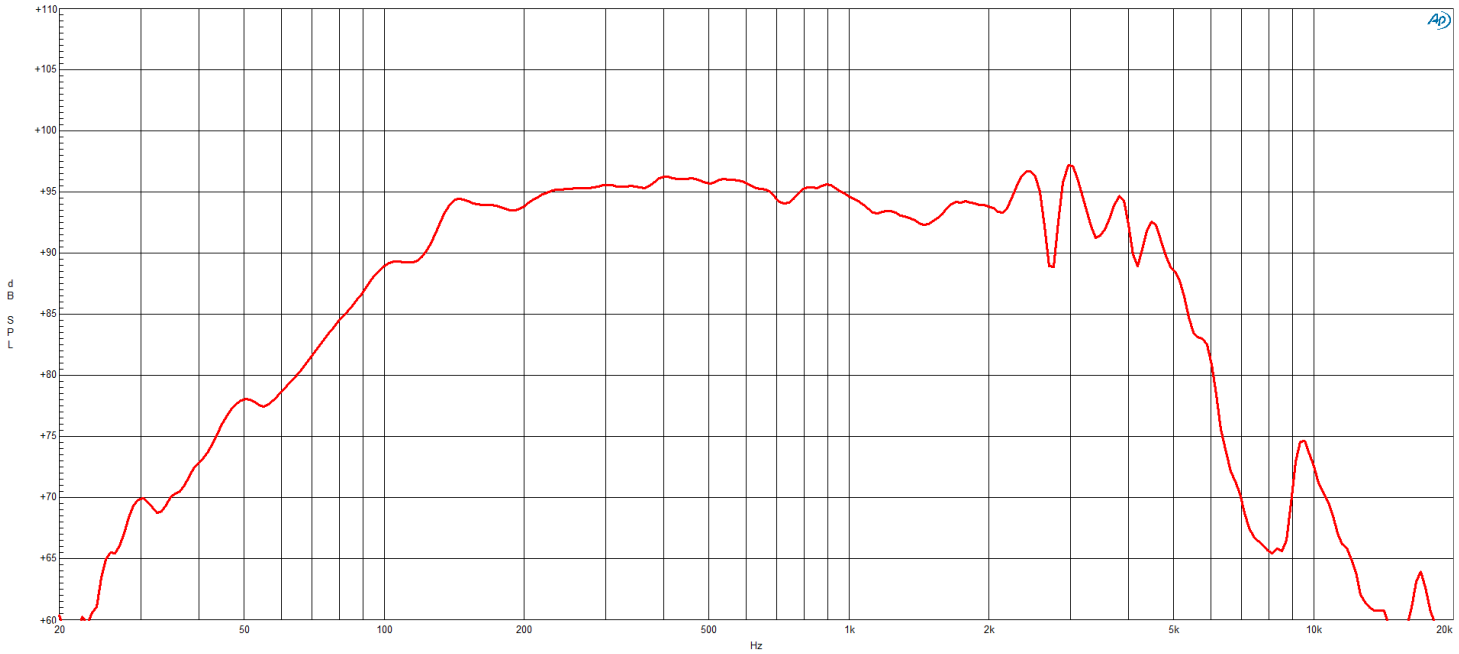

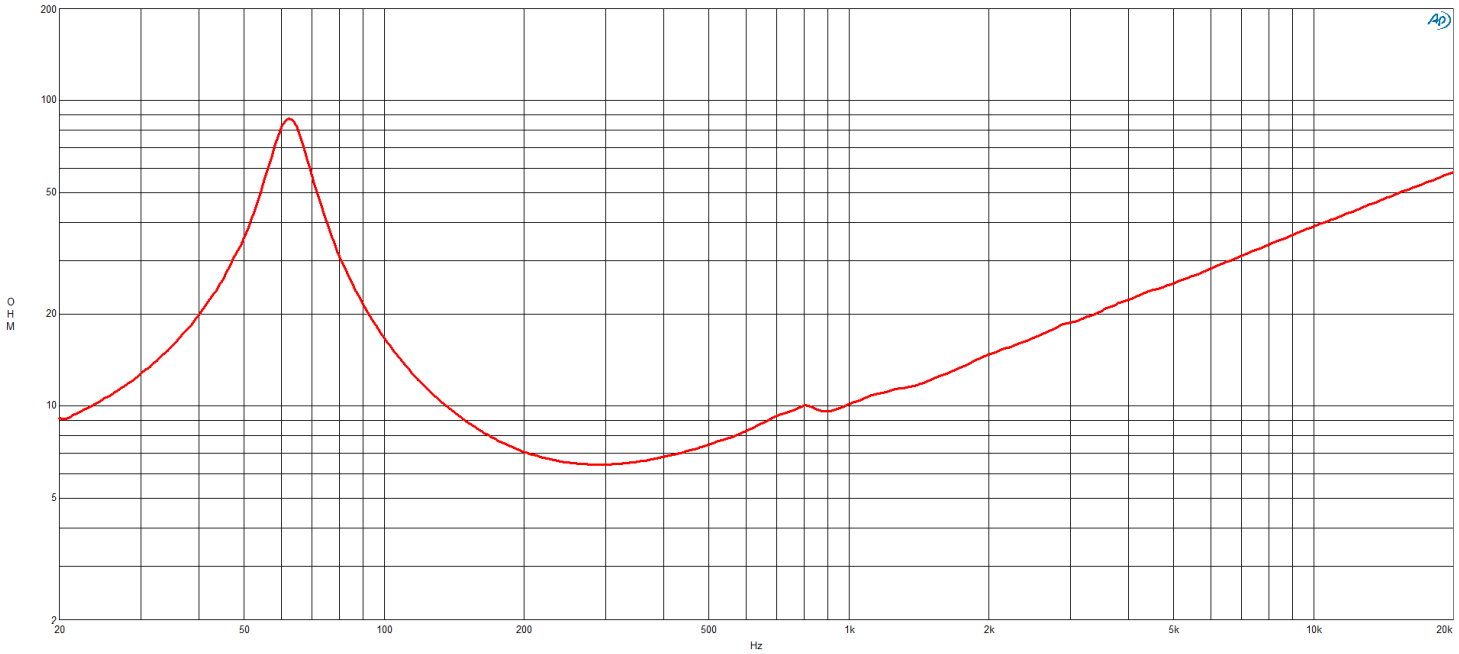

10CL64 8 Ω

Woofer

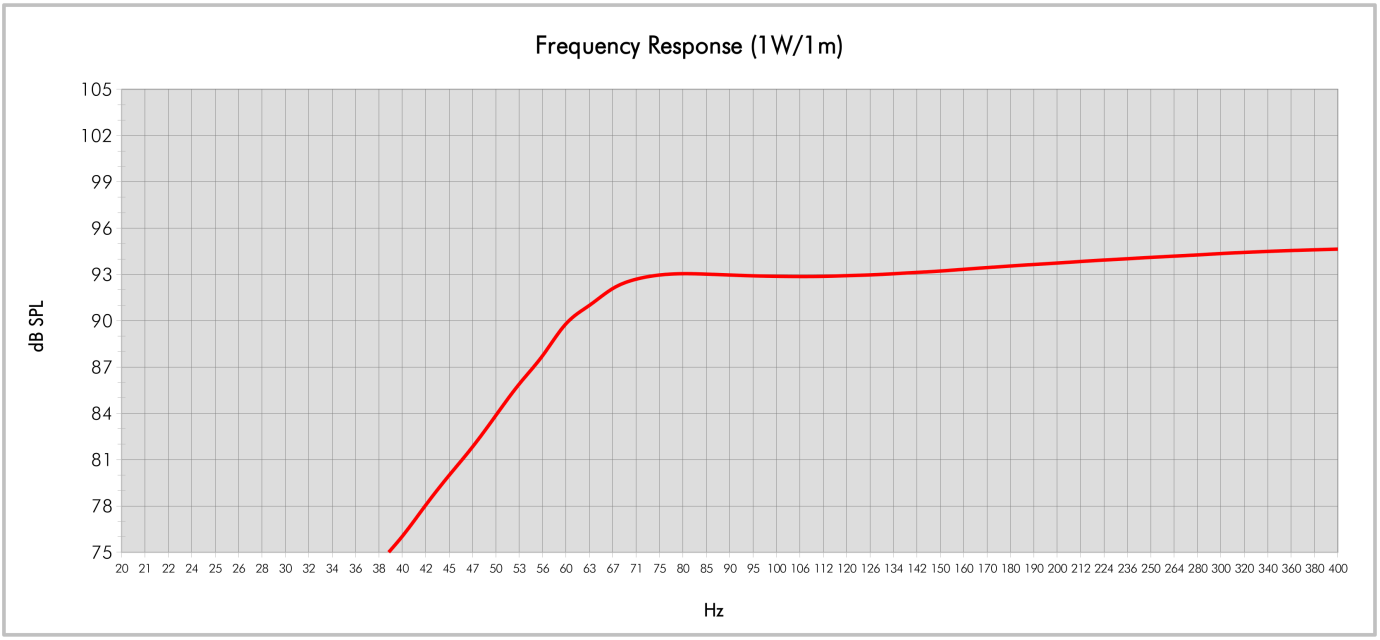

Model:	10CL64		
Enclosure Type:	Bass Reflex	Configuration:	One Driver
Internal Net Volume (Litres):	29	QB:	4
Tuning Frequency (Hz):	65	Port Area (cm²):	85
Frequency (-3 dB) (Hz):	67,0	Port Length (cm):	22,0
Frequency (-10 dB) (Hz):	51,8		

B&C Speakers S.p.A. Via Poggiomoro, 1 - Loc. Vallina, 50012 Bagno a Ripoli (FI) | ITALY
Tel. +39 055 65721 | Fax +39 055 6572312 | mail@bcspeakers.com

10CL64 8 Ω

Woofer

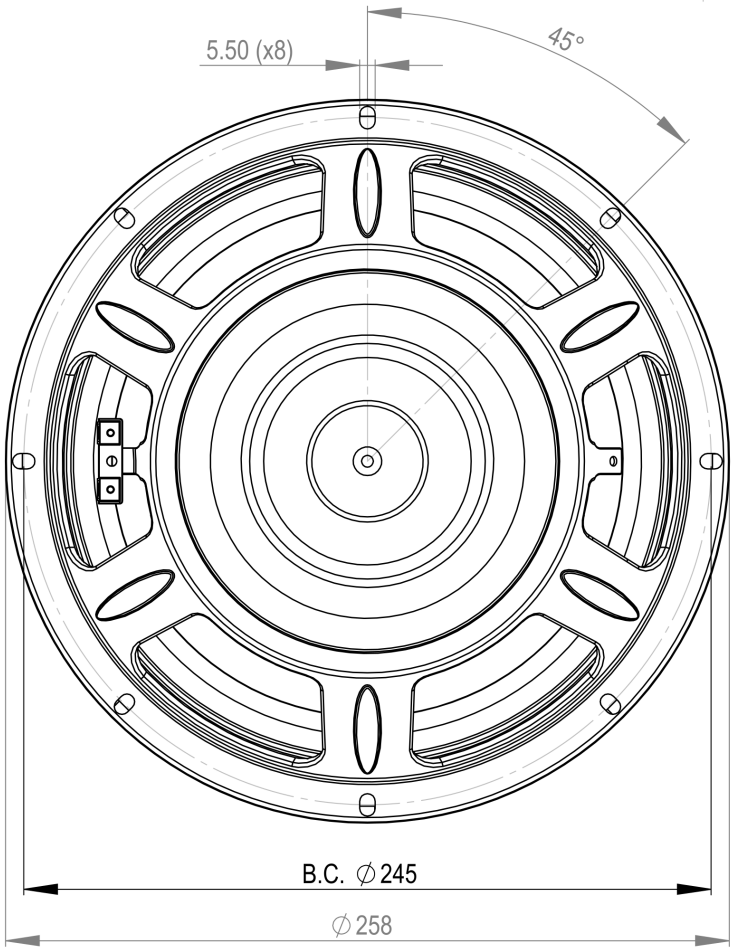

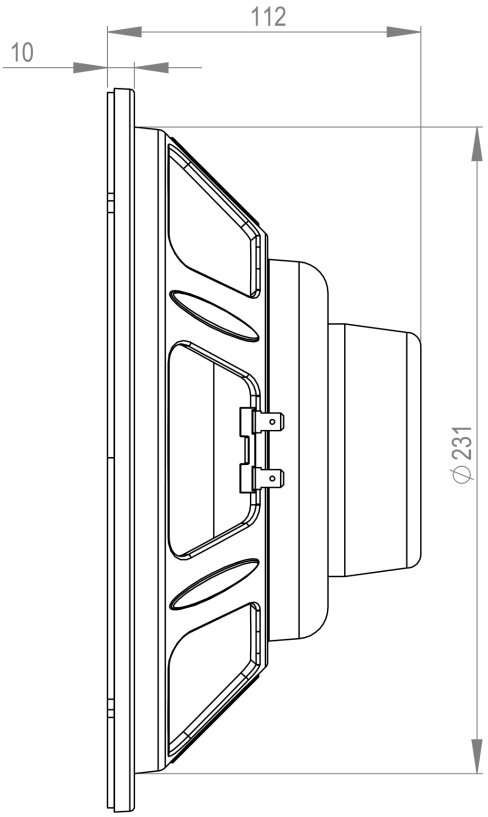

B&C Speakers S.p.A. Via Poggiomoro, 1 - Loc. Vallina, 50012 Bagno a Ripoli (FI) | ITALY
Tel. +39 055 65721 | Fax +39 055 6572312 | mail@bcspeakers.com