12CL76 8 Ω

Woofer

- 700 W continuous program power capacity
- 76 mm (3 in) copper voice coil
- 45 - 3000 Hz response
- 98.5 dB sensitivity
- Ventilated voice coil gap for reduced power compression





B&C Speakers S.p.A. Via Poggiomoro, 1 - Loc. Vallina, 50012 Bagno a Ripoli (FI) | ITALY
Tel. +39 055 65721 | Fax +39 055 6572312 | mail@bcspeakers.com

12CL76 8 Ω

Woofer

SPECIFICATIONS

Nominal Diameter	**320 mm (12 in)**
Nominal Impedance	**8 Ω**
Minimum Impedance	**6.5 Ω**
Nominal Power Handling 2 hours test made with continuous pink noise signal within the range Fs-10Fs. Power calculated on rated minumum impedance. Loudspeaker in free air.	**350 W**
Continuous Power Handling Power on Continuous Program is defined as 3 dB greater than the Nominal rating.	**700 W**
Sensitivity Applied RMS Voltage is set to 2.83 V for 8 ohms Nominal Impedance.	**98.5 dB**
Frequency Range	**45 Hz - 3000 Hz**
Voice Coil Diameter	**76 mm (3 in)**
Winding Material	**Copper**
Former Material	**Glass Fibre**
Winding Depth	**17 mm (0.67 in)**
Magnetic Gap Depth	**11 mm (0.43 in)**
Flux Density	**1.05 T**
Woofer Cone Treatment	**WP Waterproof Front Side**

PARAMETERS

Thiele-Small parameters are measured after a high level 20 Hz sine wave preconditioning test.

Fs	**48 Hz**
Re	**5.2 Ω**
Qes	**0.22**
Qms	**4.8**
Qts	**0.21**
Vas	**59 dm^3 (2.1 ft^3)**
Sd	**522 cm^2 (80.9 in^2)**
η0	**2.9 %**
Xmax	**6 mm**
Xvar	**8.5 mm**
Mms	**70 g**
Bl	**22.4 Tm**
Le	**1.5 mH**
EBP	**218 Hz**

DESIGN

Surround Shape	**Triple Roll**
Cone Shape	**Exponential**
Magnet Material	**Neodymium Inside Slug**
Spider	**Single**
Pole Design	**Straight Pole**
Woofer Cone Treatment	**WP Waterproof Front Side**
Recommended Enclosure	**40 dm^3 (1.41 ft^3)**
Recommended Tuning	**60 Hz**

MOUNTING AND SHIPPING INFO

Overall Diameter	**313 mm (12.32 in)**
Bolt Circle Diameter	**299 mm (11.77 in)**
Baffle Cutout Diameter	**282 mm (11.1 in)**
Depth	**142 mm (5.59 in)**
Flange and Gasket Thickness	**9 mm (0.35 in)**
Air Volume Occupied by Driver	**2.3 dm^3 (0.08 ft^3)**
Net Weight	**3.35 kg (7.39 lb)**
Shipping Units	**1 pcs**
Shipping Weight	**4.25 kg (9.37 lb)**
Shipping Box	**360x360x200 mm (14.17x14.17x7.87 in)**

SERVICE KITS

LF recone-kits	**RCK12CL768**

B&C Speakers S.p.A. Via Poggiomoro, 1 - Loc. Vallina, 50012 Bagno a Ripoli (FI) | ITALY
Tel. +39 055 65721 | Fax +39 055 6572312 | mail@bcspeakers.com

12CL76 8 Ω

Woofer

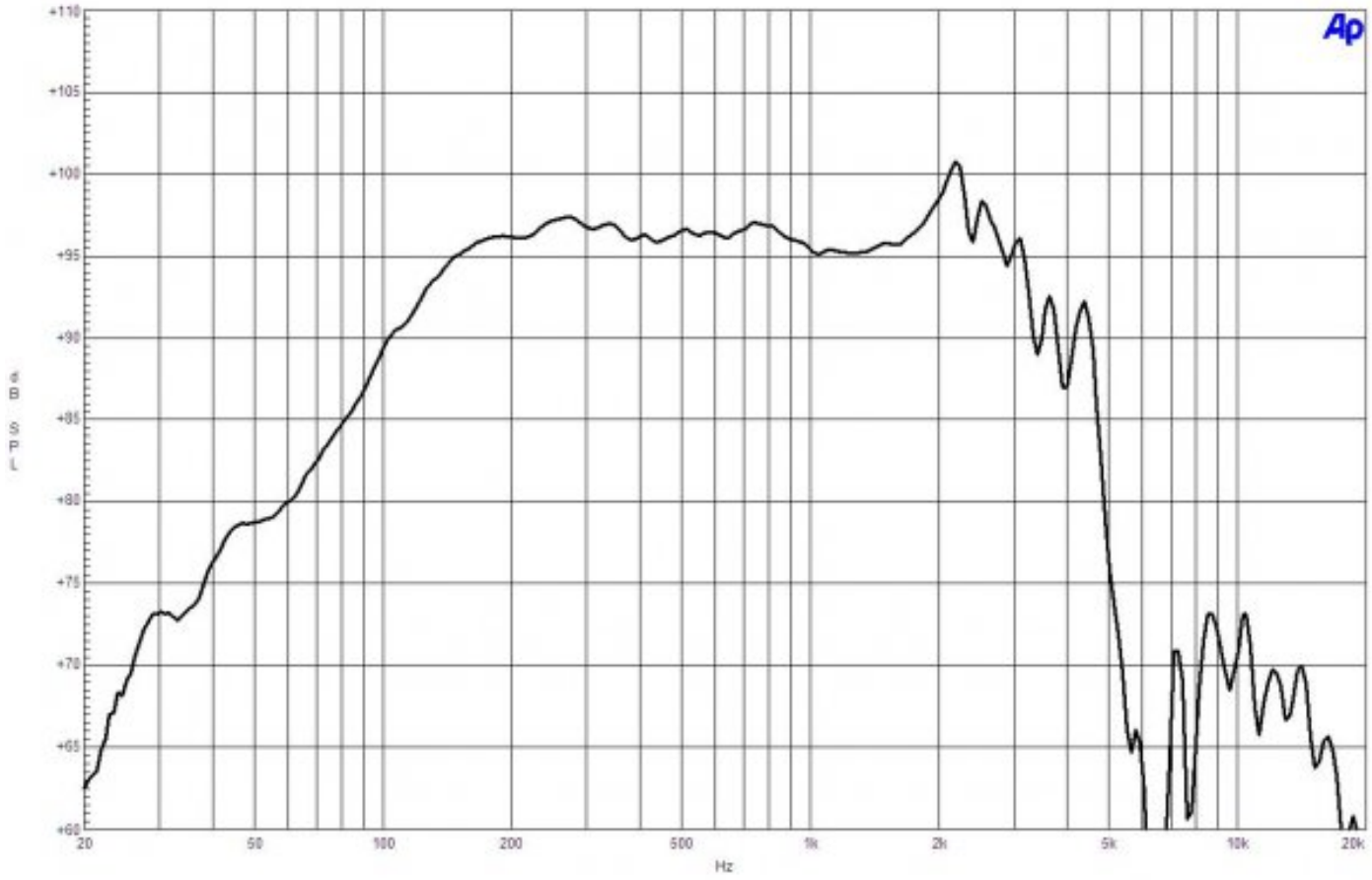

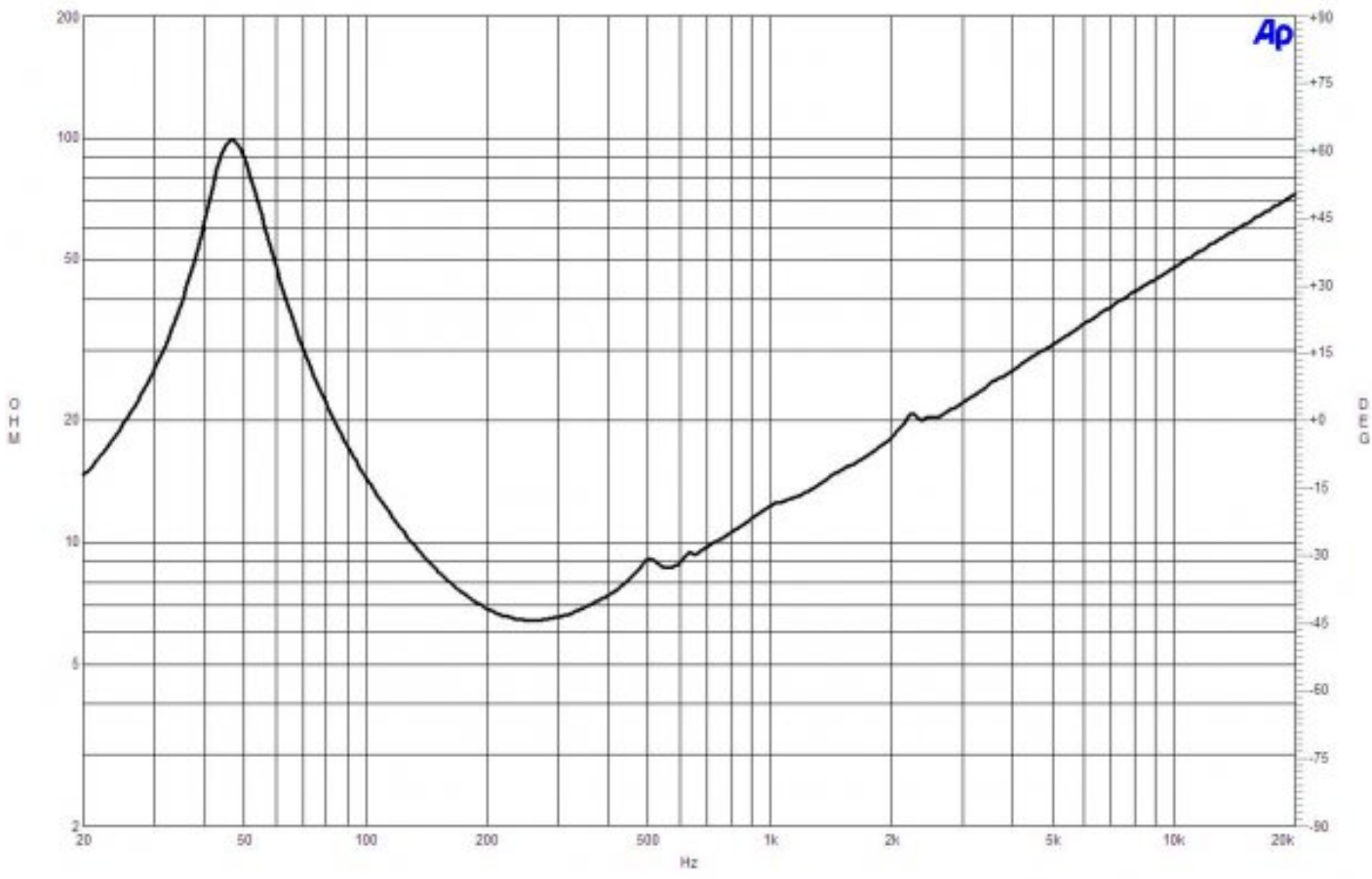

B&C Speakers S.p.A. Via Poggiomoro, 1 - Loc. Vallina, 50012 Bagno a Ripoli (FI) | ITALY
Tel. +39 055 65721 | Fax +39 055 6572312 | mail@bcspeakers.com

12CL76 8 Ω

Woofer

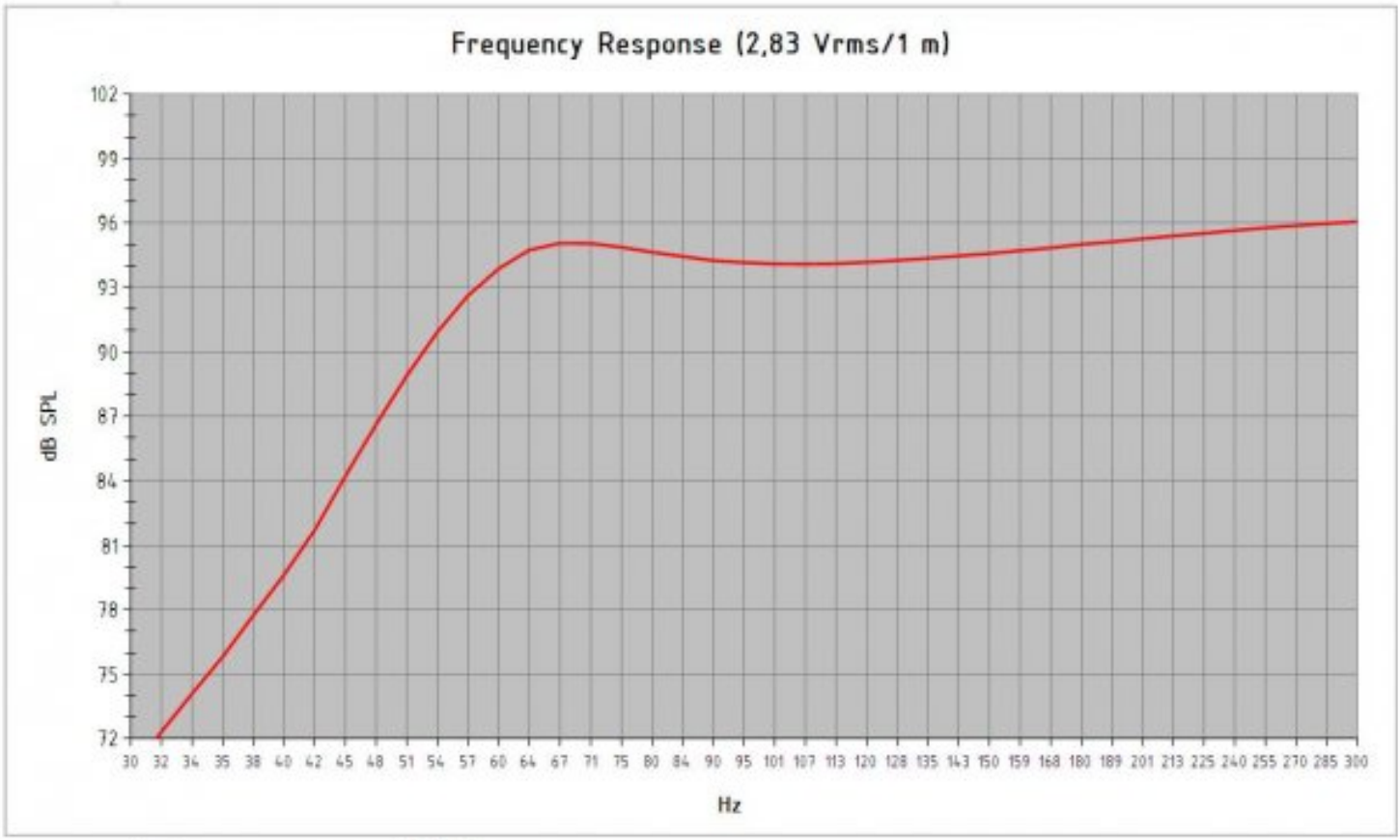

Model:	***12 CL 76***		
Enclosure Type:	***Bass Reflex***		
Internal Net Volume (Liters):	***40***		
Tuning Frequency (Hz):	***60***	*Port Area (cm²):*	***138,7***
Frequency (-3 dB) (Hz):	***60,8***	*Port Length (cm):*	***17,4***

Excursion Limited Maximum SPL at 1 meter (dB):	***121,5***	*equal to*	***342,8*** *Watts*	*(Bass Band Power Rating)*
Thermal Limited Maximum SPL at 1 meter (dB):	***121,6***	*equal to*	***350,0*** *Watts*	*(Mid Band Power Rating)*

B&C Speakers S.p.A. Via Poggiomoro, 1 - Loc. Vallina, 50012 Bagno a Ripoli (FI) | ITALY
Tel. +39 055 65721 | Fax +39 055 6572312 | mail@bcspeakers.com

12CL76 8 Ω

Woofer

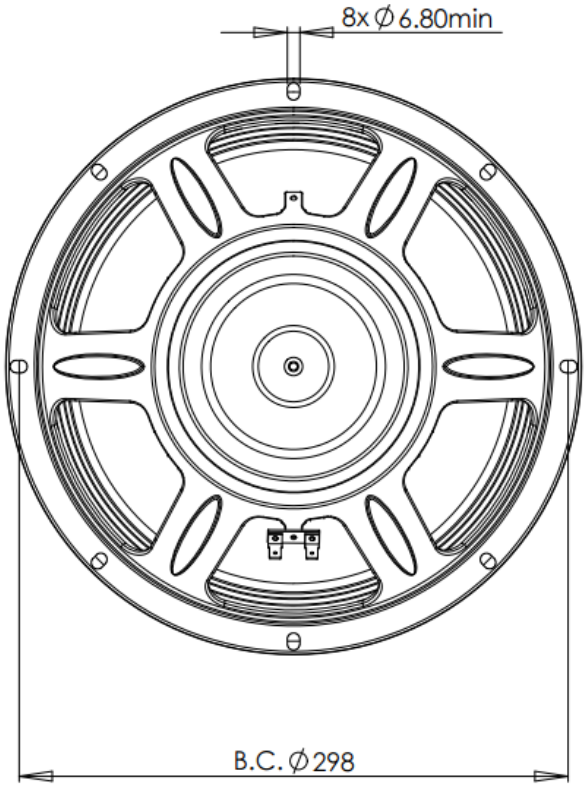

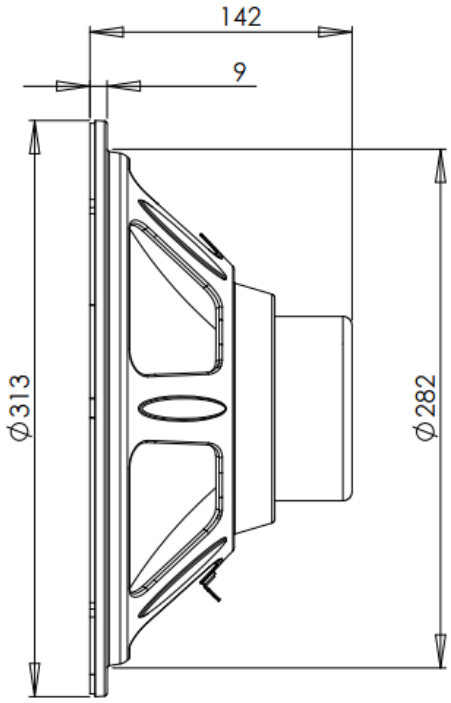

B&C Speakers S.p.A. Via Poggiomoro, 1 - Loc. Vallina, 50012 Bagno a Ripoli (FI) | ITALY
Tel. +39 055 65721 | Fax +39 055 6572312 | mail@bcspeakers.com