6CLA51 8 Ω

Woofer

- 500 W continuous program power capacity
- 51 mm (2 in) aluminium voice coil
- 100 - 4000 Hz response
- 94.5 dB sensitivity

The 6CLA51 are one of the more recent additions to the cost effective and popular CL Series series of neodymium woofers. Featuring aluminum voice coils, the 6CLA51 are a perfect fit for low-cost line array or point-source applications.





B&C Speakers S.p.A. Via Poggiomoro, 1 - Loc. Vallina, 50012 Bagno a Ripoli (FI) | ITALY
Tel. +39 055 65721 | Fax +39 055 6572312 | mail@bcspeakers.com

6CLA51 8 Ω

Woofer

SPECIFICATIONS

Nominal Diameter	**170 mm (6.5 in)**
Nominal Impedance	**8 Ω**
Minimum Impedance	**6.1 Ω**
Nominal Power Handling 2 hours test made with continuous pink noise signal within the range Fs-10Fs. Power calculated on rated minumum impedance. Loudspeaker in free air.	**250 W**
Continuous Power Handling Power on Continuous Program is defined as 3 dB greater than the Nominal rating.	**500 W**
Sensitivity Applied RMS Voltage is set to 2.83 V for 8 ohms Nominal Impedance.	**94.5 dB**
Frequency Range	**100 Hz - 4000 Hz**
Voice Coil Diameter	**51 mm (2 in)**
Winding Material	**Aluminium**
Former Material	**Polyimide**
Winding Depth	**13.5 mm (0.53 in)**
Magnetic Gap Depth	**8 mm (0.31 in)**
Flux Density	**1.05 T**
Woofer Cone Treatment	**WP Waterproof Front Side**

PARAMETERS

Thiele-Small parameters are measured after a high level 20 Hz sine wave preconditioning test.

Fs	**96 Hz**
Re	**5 Ω**
Qes	**0.36**
Qms	**2.9**
Qts	**0.32**
Vas	**4.3 dm^3 (0.13 ft^3)**
Sd	**132 cm^2 (20.5 in^2)**
η0	**1.1 %**
Xmax	**4.8 mm**
Xvar	**4 mm**
Mms	**15 g**
Bl	**11.4 Tm**
Le	**0.9 mH**
EBP	**267 Hz**

DESIGN

Surround Shape	**Triple Roll**
Cone Shape	**Radial**
Magnet Material	**Neodymium Inside Slug**
Spider	**Single**
Pole Design	**T-Pole**
Woofer Cone Treatment	**WP Waterproof Front Side**
Recommended Enclosure	**11 dm^3 (0.39 ft^3)**
Recommended Tuning	**95 Hz**
Recommended Loading	**Vented Box**

MOUNTING AND SHIPPING INFO

Overall Diameter	**180 mm (7.09 in)**
Bolt Circle Diameter	**165 mm (6.5 in)**
Baffle Cutout Diameter	**146 mm (5.75 in)**
Depth	**80 mm (4.45 in)**
Flange and Gasket Thickness	**7 mm (0.28 in)**
Net Weight	**1.2 kg (2.65 lb)**
Shipping Units	**1 pcs**
Shipping Weight	**1.45 kg (3.2 lb)**
Shipping Box	**210x210x125 mm (8.27x8.27x4.92 in)**

SERVICE KITS

LF recone-kits	**RCK06CLA518**

B&C Speakers S.p.A. Via Poggiomoro, 1 - Loc. Vallina, 50012 Bagno a Ripoli (FI) | ITALY
Tel. +39 055 65721 | Fax +39 055 6572312 | mail@bcspeakers.com

6CLA51 8 Ω

Woofer

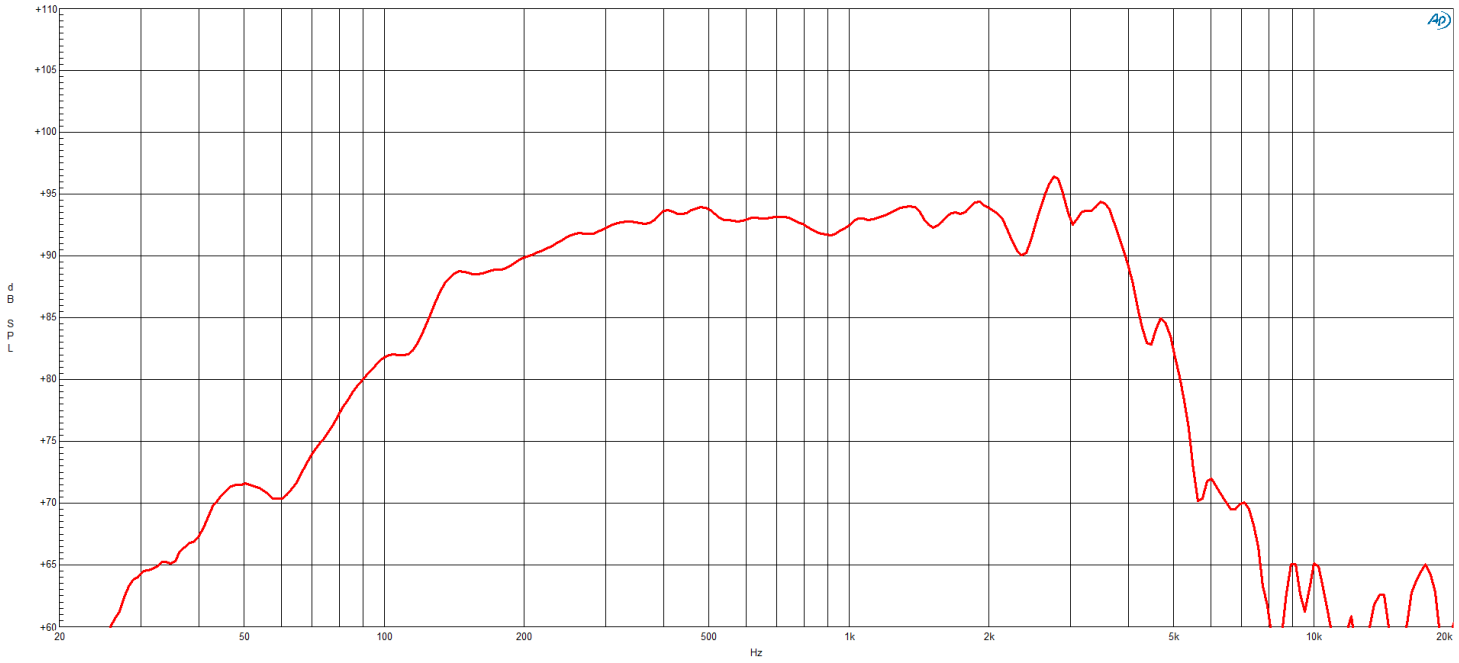

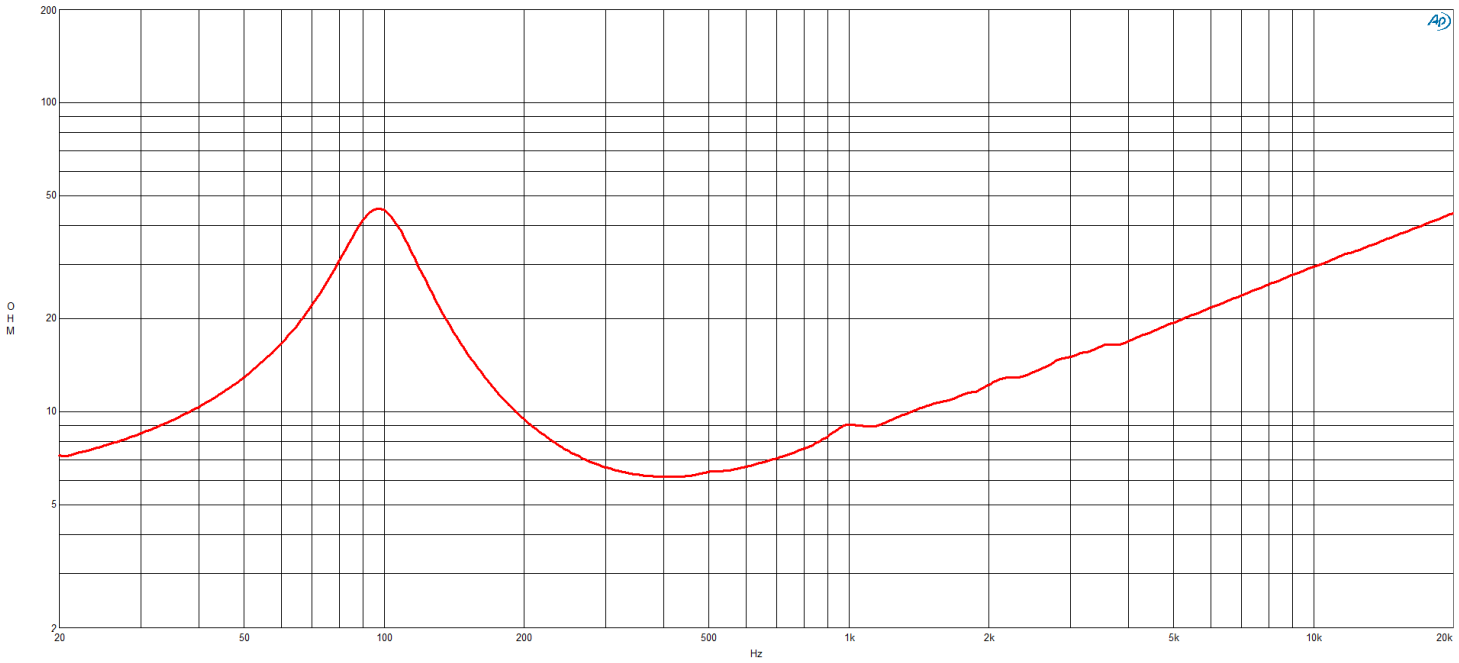

6CLA51 8 Ω

Woofer

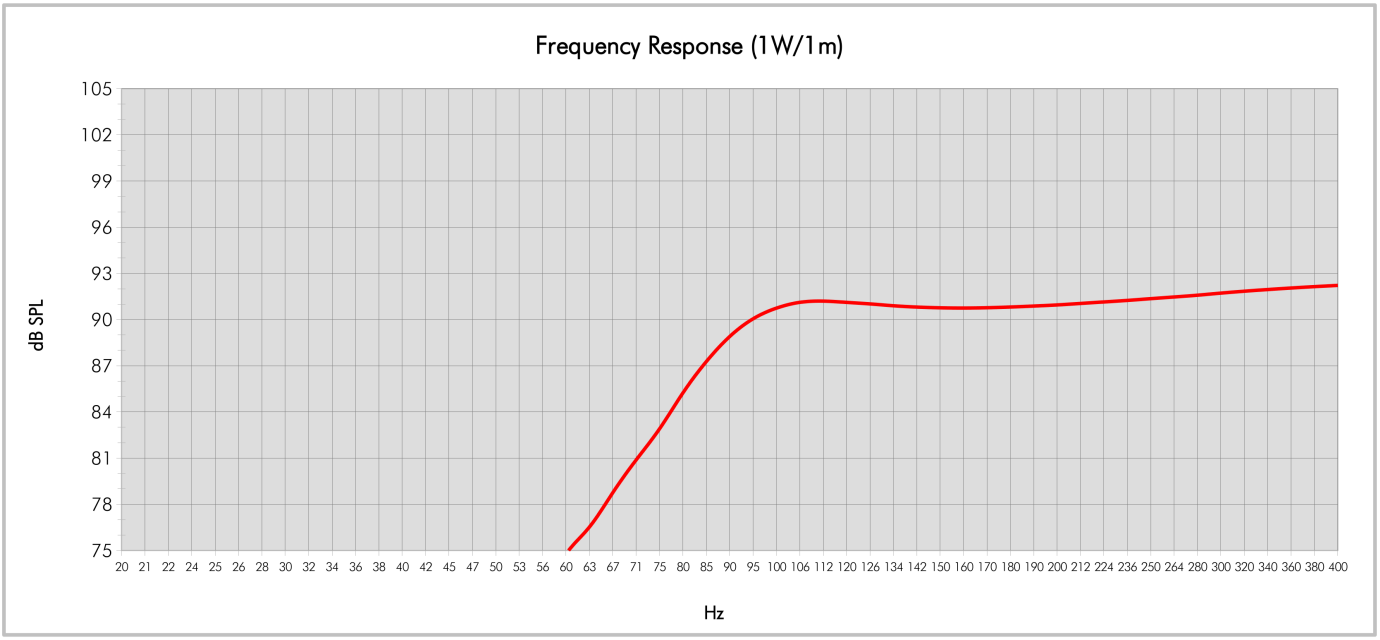

Model:	6CLA51-8		
Enclosure Type:	Bass Reflex	Configuration:	One Driver
Internal Net Volume (Litres):	11	QB:	3
Tuning Frequency (Hz):	95	Port Area (cm^2):	51
Frequency (-3 dB) (Hz):	95,9	Port Length (cm):	8,3
Frequency (-10 dB) (Hz):	75,6		

05/25

B&C Speakers S.p.A. Via Poggiomoro, 1 - Loc. Vallina, 50012 Bagno a Ripoli (FI) | ITALY
Tel. +39 055 65721 | Fax +39 055 6572312 | mail@bcspeakers.com

6CLA51 8 Ω

Woofer

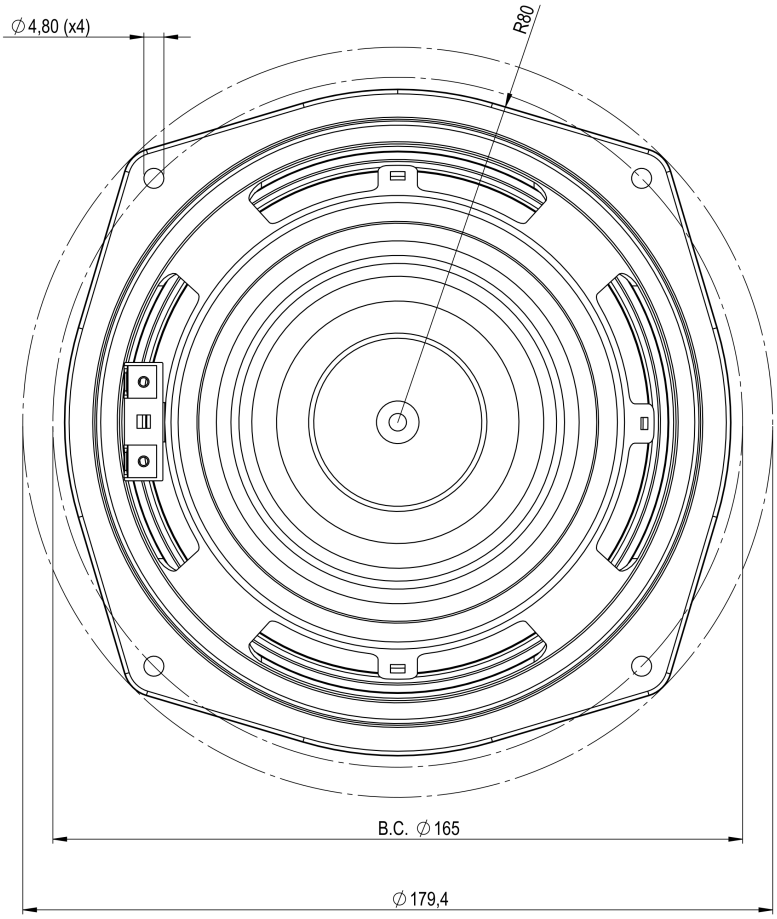

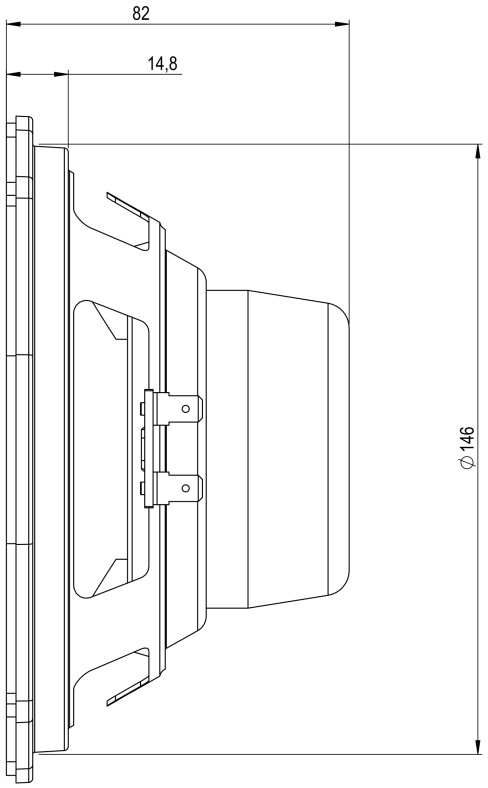

B&C Speakers S.p.A. Via Poggiomoro, 1 - Loc. Vallina, 50012 Bagno a Ripoli (FI) | ITALY
Tel. +39 055 65721 | Fax +39 055 6572312 | mail@bcspeakers.com