8FW51 8 Ω

Woofer

- 400 W continuous program power capacity
- 51 mm (2 in) copper voice coil
- 70 - 5000 Hz response
- 97 dB sensitivity
- Shorting copper cap for extended HF response
- Ventilated voice coil gap for reduced power compression





B&C Speakers S.p.A. Via Poggiomoro, 1 - Loc. Vallina, 50012 Bagno a Ripoli (FI) | ITALY
Tel. +39 055 65721 | Fax +39 055 6572312 | mail@bcspeakers.com

8FW51 8 Ω

Woofer

SPECIFICATIONS

Nominal Diameter	**200 mm (8 in)**
Nominal Impedance	**8 Ω**
Minimum Impedance	**7.4 Ω**
Nominal Power Handling 2 hours test made with continuous pink noise signal within the range Fs-10Fs. Power calculated on rated minumum impedance. Loudspeaker in free air.	**200 W**
Continuous Power Handling Power on Continuous Program is defined as 3 dB greater than the Nominal rating.	**400 W**
Sensitivity Applied RMS Voltage is set to 2.83 V for 8 ohms Nominal Impedance.	**97 dB**
Frequency Range	**70 Hz - 5000 Hz**
Voice Coil Diameter	**51 mm (2 in)**
Winding Material	**Copper**
Former Material	**Kapton**
Winding Depth	**17 mm (0.65 in)**
Magnetic Gap Depth	**10 mm (0.4 in)**
Flux Density	**1.35 T**
Woofer Cone Treatment	**TWP Waterproof Both Sides**

PARAMETERS

Thiele-Small parameters are measured after a high level 20 Hz sine wave preconditioning test.

Fs	**74 Hz**
Re	**5.2 Ω**
Qes	**0.21**
Qms	**9.3**
Qts	**0.21**
Vas	**12 dm^3 (0.42 ft^3)**
Sd	**220 cm^2 (34.1 in^2)**
η0	**2.1 %**
Xmax	**6 mm**
Xvar	**5 mm**
Mms	**27 g**
Bl	**17.7 Tm**
Le	**0.56 mH**
EBP	**352 Hz**

DESIGN

Surround Shape	**Double Roll**
Cone Shape	**Exponential**
Magnet Material	**Ferrite**
Spider	**Single**
Pole Design	**T-Pole**
Woofer Cone Treatment	**TWP Waterproof Both Sides**
Recommended Enclosure	**12 dm^3 (0.42 ft^3)**
Recommended Tuning	**74 Hz**

MOUNTING AND SHIPPING INFO

Overall Diameter	**225 mm (8.8 in)**
Bolt Circle Diameter	**210 mm (8.3 in)**
Baffle Cutout Diameter	**187 mm (7.4 in)**
Depth	**100 mm (3.94 in)**
Flange and Gasket Thickness	**9 mm (0.35 in)**
Air Volume Occupied by Driver	**1.5 dm^3 (0.05 ft^3)**
Net Weight	**5.6 kg (12.35 lb)**
Shipping Units	**1 pcs**
Shipping Weight	**6.05 kg (13.34 lb)**
Shipping Box	**255x255x150 mm (10.04x10.04x5.91 in)**

SERVICE KITS

LF recone-kits	**RCK008FW518**

B&C Speakers S.p.A. Via Poggiomoro, 1 - Loc. Vallina, 50012 Bagno a Ripoli (FI) | ITALY
Tel. +39 055 65721 | Fax +39 055 6572312 | mail@bcspeakers.com

8FW51 8 Ω

Woofer

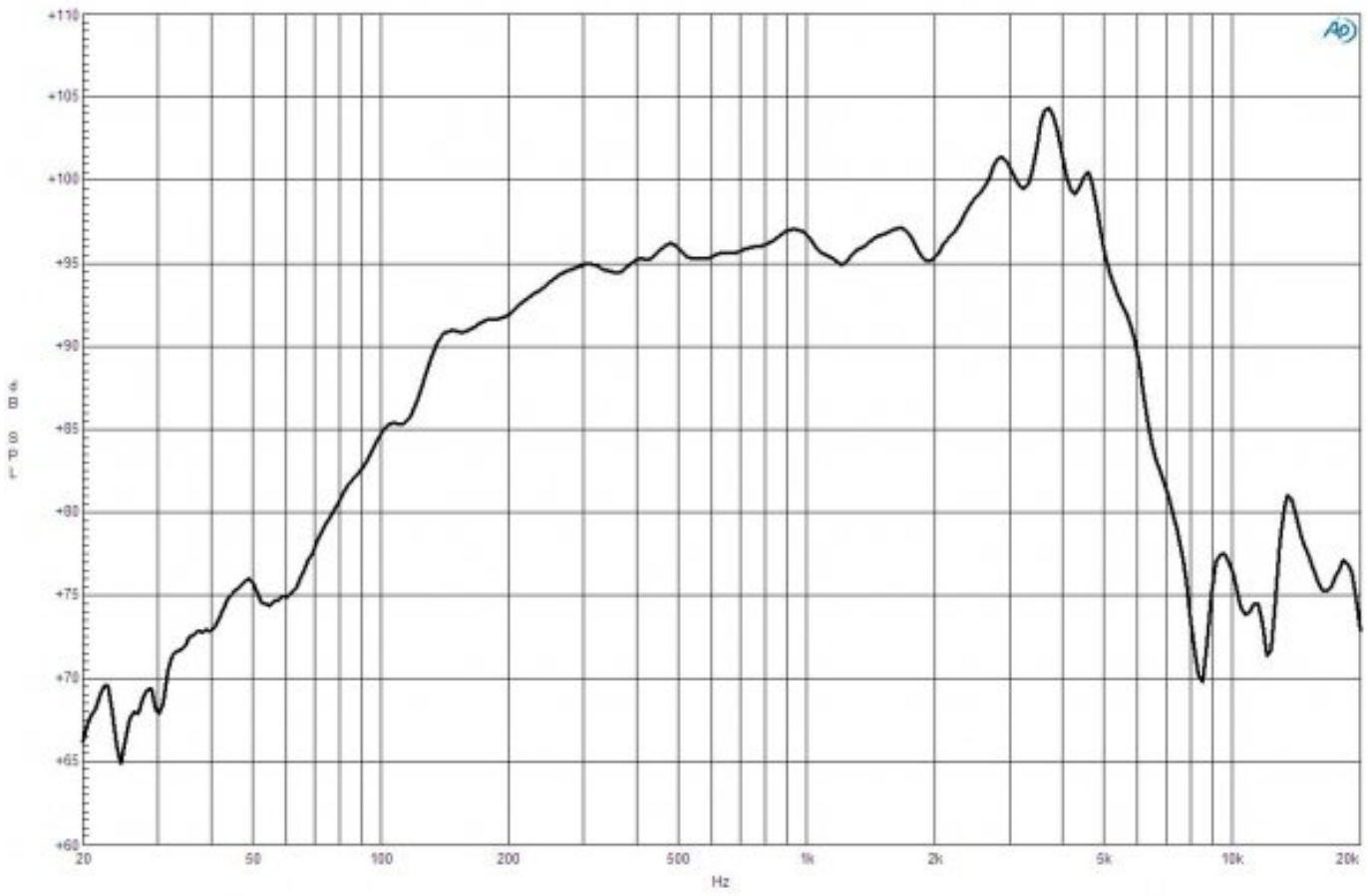

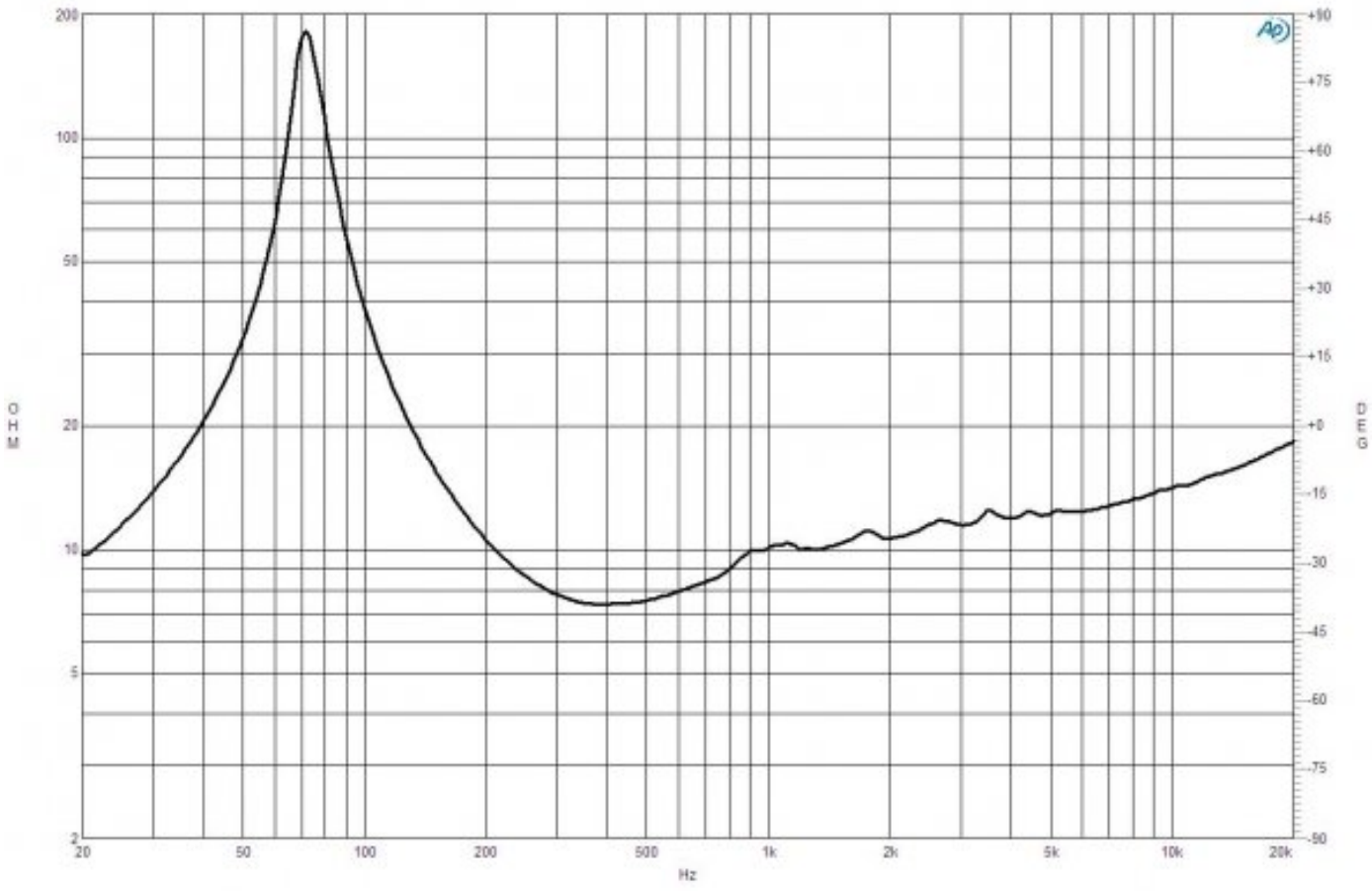

B&C Speakers S.p.A. Via Poggiomoro, 1 - Loc. Vallina, 50012 Bagno a Ripoli (FI) | ITALY
Tel. +39 055 65721 | Fax +39 055 6572312 | mail@bcspeakers.com

8FW51 8 Ω

Woofer

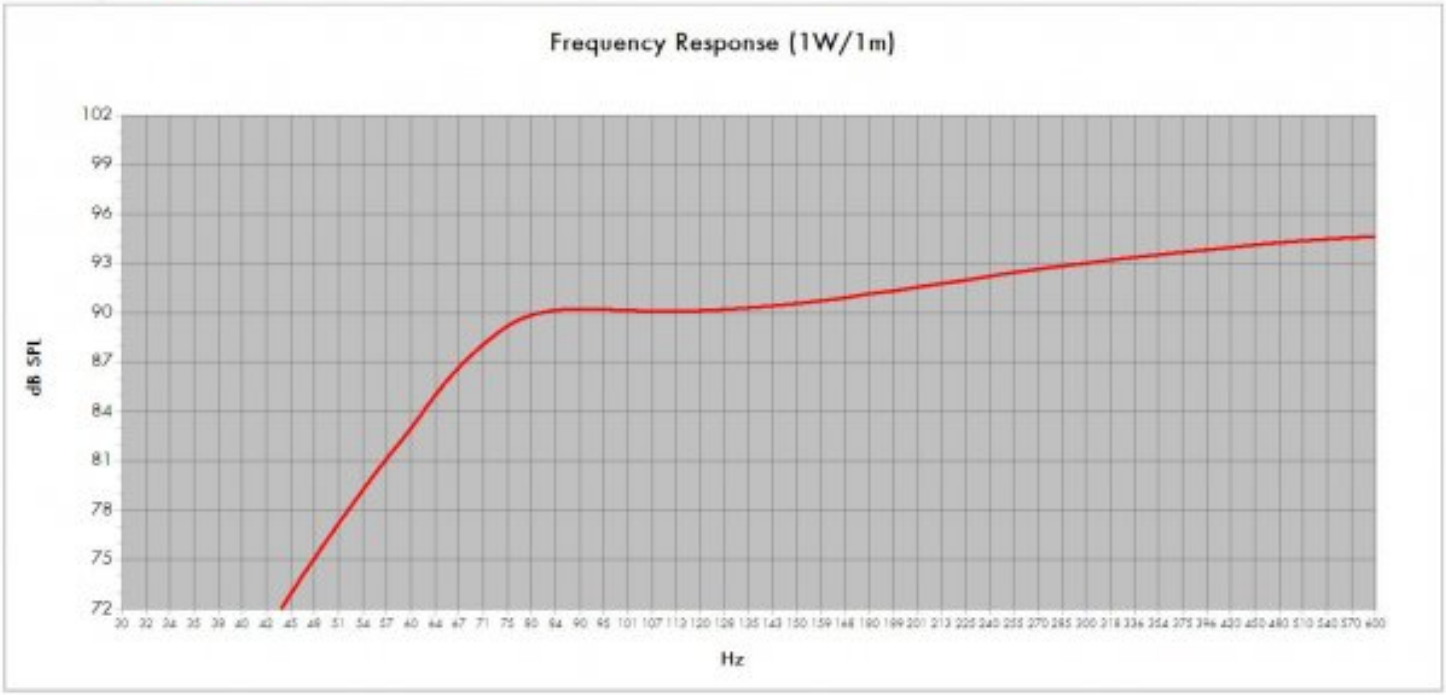

Model:	8FW51		
Enclosure Type:	Bass Reflex	Configuration:	One Driver
Internal Net Volume (Litres):	12	QB:	4
Tuning Frequency (Hz):	74	Port Area (cm²):	43,0
Frequency (-3 dB) (Hz):	255,4	Port Length (cm):	13,2

Excursion Limited Maximum SPL at 1 meter (dB): 118,4 equal to 200,0 Watts (Bass Band Power Rating)
Thermal Limited Maximum SPL at 1 meter (dB): 118,4 equal to 200,0 Watts (Mid Band Power Rating)

B&C Speakers S.p.A. Via Poggiomoro, 1 - Loc. Vallina, 50012 Bagno a Ripoli (FI) | ITALY
Tel. +39 055 65721 | Fax +39 055 6572312 | mail@bcspeakers.com

8FW51 8 Ω

Woofer

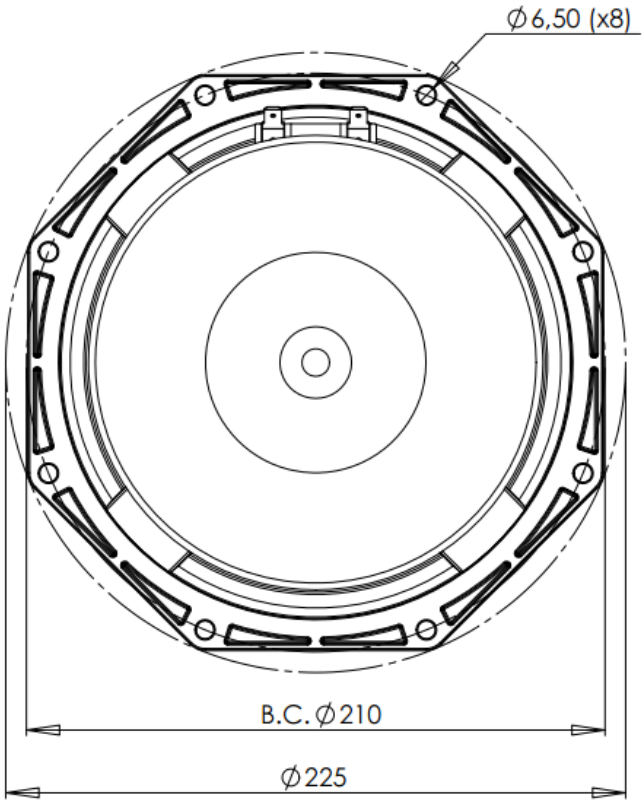

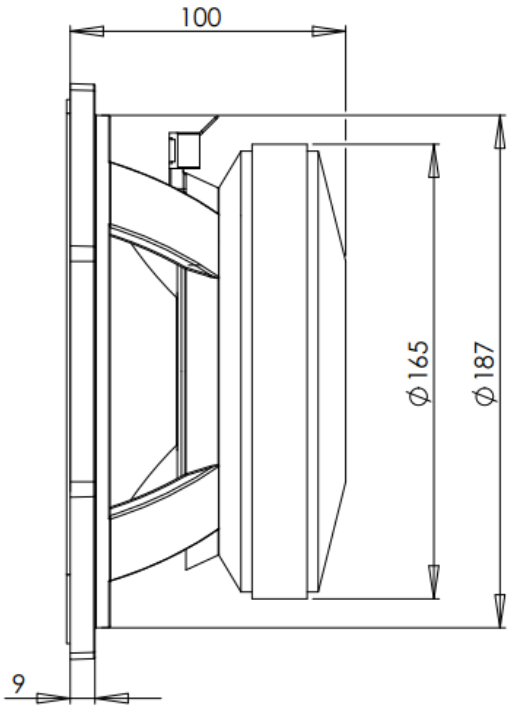

B&C Speakers S.p.A. Via Poggiomoro, 1 - Loc. Vallina, 50012 Bagno a Ripoli (FI) | ITALY
Tel. +39 055 65721 | Fax +39 055 6572312 | mail@bcspeakers.com