10NCX

8Ω

Coaxials - 10.0 Inches

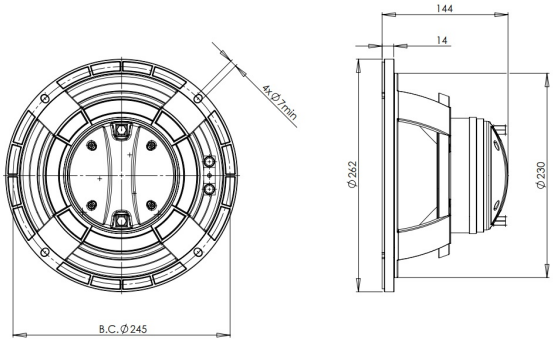

- 400 W continuous program power capacity
- 70° nominal coverage
- 60 - 18000 Hz response
- 94 dB sensitivity
- Neodymium magnet assembly
- 45.8 mm (1.8”) HF unit exit diameter
- FB10NCX dedicated crossover network

B&C Speakers s.p.a.

Via Poggiomoro, 1 - Loc. Vallina, 50012 Bagno a Ripoli (FI) - ITALY - Tel. +39 055 65721 - Fax +39 055 6572312 - mail@bcspeakers.com

10NCX

Coaxials- 10.0 Inches

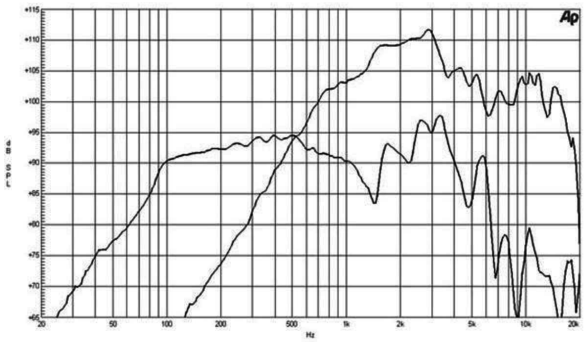

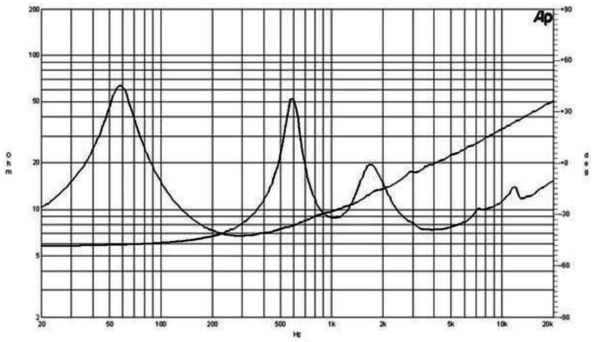

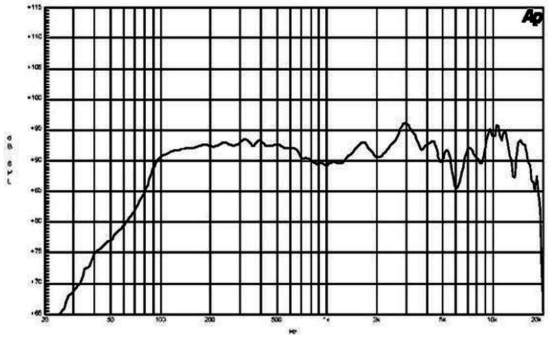

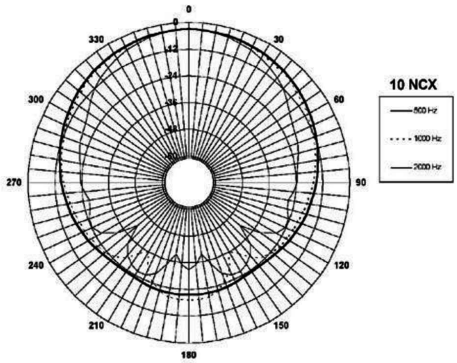

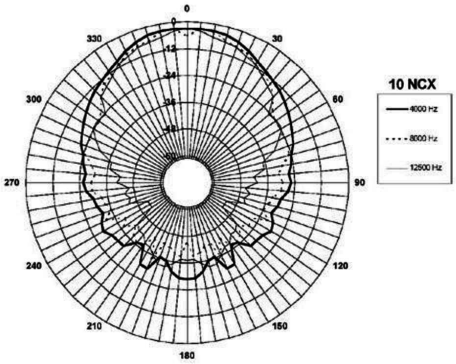

SPECIFICATIONS

Nominal Diameter	225 mm (10.0 in)
Nominal Impedance	8 Ω
Minimum Impedance LF	6.8 Ω
Minimum Impedance HF	7.3 Ω
Frequency Range	60 - 18000 Hz
Dispersion Angle[1]	70 °
Woofer Cone Treatment	TWP Waterproof Both Sides
Magnet Material	Neodymium Ring

SPECIFICATIONS LF UNIT

LF Sensitivity[2]	94.0 dB
LF Nominal Power Handling[3]	200 W
LF Continuous Power Handling[4]	400 W
LF Voice Coil Diameter	65 mm (2.5 in)
LF Winding Material	Aluminium

SPECIFICATIONS HF UNIT

HF Sensitivity[5]	106.0 dB
HF Nominal Power Handling[6]	50 W
HF Continuous Power Handling[7]	100 W
HF Voice Coil Diameter	65 mm (2.5 in)
HF Winding Material	Aluminium
Diaphragm Material	Titanium
Recommended Crossover[8]	1.2 kHz

B&C Speakers s.p.a.

Via Poggiomoro, 1 - Loc. Vallina, 50012 Bagno a Ripoli (FI) - ITALY - Tel. +39 055 65721 - Fax +39 055 6572312 - mail@bcspeakers.com

PARAMETERS

Resonance Frequency	57 Hz
Re	5.6 Ω
Qes	0.35
Qms	3.7
Qts	0.32
Vas	40.0 dm^3 (1.4 ft^3)
Sd	320.0 cm^2 (49.1 in^2)
η_0	2.0 %
Xmax	± 3.0 mm
Xvar	± 6.0 mm
Mms	28.0 g
Bl	12.7 Txm
Le	1.2 mH
EBP	162 Hz

MOUNTING AND SHIPPING INFO

Overall Diameter	262 mm (10.3 in)
Bolt Circle Diameter	245 mm (9.6 in)
Baffle Cutout Diameter	230 mm (8.8 in)
Depth	144 mm (5.7 in)
Flange and Gasket Thickness	14 mm (0.55 in)
Net Weight	4.7 kg (10.36 lb)
Shipping Units	1
Shipping Weight	5.6 kg (12.35 lb)
Shipping Box	360x360x200 mm (14.17x14.17x7.87 in)

CROSSOVER

FB10NCX 8Ω

SERVICE KIT

LF recone kit	RCK010NCX8
MF replacement diaphragm	MMD6108M

1. Included by –6 dB down points.
2. Applied RMS Voltage is set to 2.83V.
3. 2 hours test made with continuous pink noise signal within the range Fs-10Fs. Power calculated on rated minimum impedance. Loudspeaker in free air.
4. Power on Continuous Program is defined as 3 dB greater than the Nominal rating.
5. Applied RMS Voltage is set to 2.83V.
6. 2 hour test made with continuous pink noise signal within the range from the recommended crossover frequency to 20 kHz. Power calculated on rated minimum impedance. Loudspeaker in free air.
7. Power on Continuous Program is defined as 3 dB greater than the Nominal rating.
8. 12 dB/oct. or higher slope high-pass filter.

B&C Speakers s.p.a.

Via Poggiomoro, 1 - Loc. Vallina, 50012 Bagno a Ripoli (FI) - ITALY - Tel. +39 055 65721 - Fax +39 055 6572312 - mail@bcspeakers.com